PROJECT INTRODUCTION

The Project Consists Of The Following At The NJDWSC Wanaque South Pump Station Located At 310 Fairfield Road In Wayne, NJ:

- Replacement Of The Existing Hot Water Boiler And Three Pumps Located In The Mechanical Room. Two New Hot Water Boilers Along With Four Pumps Will Be Installed In Their Place. The Existing Heating Hot Water And Natural Gas Distribution Piping Will Remain And Be Reused And Modified As Required And Noted On Drawings.
- Replacement of The Two Existing Heating Only Rooftop Air Handlers Serving The Pump Room. Two New Air Handlers With Hot Water Coils And Local Thermostats Will Be Installed In Their Place.
- Replacement Of The Existing DX Cooling, Hot Water Heating Air Handler Located In The Mechanical Room. One New Air Handler With DX Cooling And Hot Water Heating And One New Exterior, Grade Mounted Condensing Unit Will Be Installed In Their Place.
- Replacement Of Nine Existing Hot Water Unit Heaters Located Throughout The Building.
- Replacement Of Ten Existing Roof Mounted Exhaust Fans
- Replacement Of Screen Room Lighting And Installation Of New Controls
- Relocation Of Existing Water Heater And Associated Piping

This Is A Single Prime Contract. The Awarded Contractor Will Be Responsible For Hiring The Services Of Licensed Subcontractors As Part Of The Project. This Shall Include All Necessary Labor And Materials For The Subcontractors Scope.

The Proposal Shall Include All Work Related To Modifications To The Existing Piping And Installation Of New Piping And Electrical Connections. All Questions And Clarifications Shall Be Submitted To The Owner And Addressed Before The Bids Are Finalized.

SCOPE OF WORK OVERVIEW

The Following Is A Brief Scope Of The Work For This Project (Not Intended To Be All Inclusive):

1. The Existing Cast Iron Sectional Boiler, Expansion Tanks, Pumps, Piping, Air Handlers, Ductwork, And Accessories Will Be Removed As Noted And Disposed Of By The Contractor.
2. Contractor Shall Be Responsible For Application Of All Local Building Department Permits, Registration Of Boiler With Appropriate State Agency, And Any Required Testing. Owner Will Obtain DCA Plan Approval And Contractor To Obtain Construction Permits. All Permit Applications To Be Reviewed By Owner Before Submittal To DCA.
3. Boilers And All Supplemental Equipment Shall Be Started Up By Approved Vendor Personnel And Commissioned To Confirm Proper Performance And Operating Conditions.
4. All Coloring And Labeling Of New Piping Shall Match Existing.
5. Perform Boil-Out And Cleaning Procedures According To Manufacturer's Written Instructions. Boiler Shall Be Washed And Flushed Until Water Leaving Boiler Is Clear. Contractor Shall Dispose Of All Water And Chemicals Used During Flushing In An Approved Manner. No Chemicals Shall Be Dumped Into Floor Drains.
6. Existing Floor Drains Shall Be Scoped Out And Cleaned After Construction Is Complete.
7. Floors To Be Finished Where Pads Are Demolished.
8. Existing Chimney / Flue Shall Be Removed And Replaced With New Category IV Breeching For Condensing Boiler Application. Existing Roof Penetration Shall Be Resealed To Accommodate New Breeching.
9. All Valves Shall Have A Position Indicator.
10. Replace Screen Room Lighting. New Motorized Lowering System Shall Be Provided To Facilitate Maintenance.
11. No Hazardous Materials Were Identified In The Project Areas By The Owner And Abatement Is Not Included In This Scope.
12. All Construction Phasing Shall Be Coordinated With The Owner Prior To The Start Of The Project.
13. Contractor Shall Drain, Clean, Passivate, And Refill All Domestic And Heating Water Piping.
14. Provide Air Vents At All High Points And Valved Drains In All Low Points Of Hydronic Systems.
15. Refer To Technical Specification Section 230130.51 For Details On Optional Duct Cleaning. See Note 3 On M101 For Additional Information.

SPECIAL EMPHASIS, CONCERNS, & LIMITATIONS

Communication

1. The Engineer And Owner Shall Be Notified Immediately Upon Discovery Of A Problem Or Conflict. Contractor Shall Promptly Identify One Or More Proposed Solutions But Shall Not Proceed Until So Authorized.
2. All Required Shutdowns Must Be Coordinated With The Owner And Limited To A Minimum In Order For The Owner To Maintain Their Services Throughout The Day.

Construction

1. Submittals (Shop Drawings) Shall Be Provided For Each Piece Of Purchased Equipment. Ensure Thoroughness And Accuracy Of The Submittals. The Contractor Shall Provide A Stamp On The Shop Drawings Stating That They Conform To The Specifications.
2. Long Lead Items Must Be Ordered Promptly To Ensure Timely Deliveries.
3. All Work Must Follow The Proposed Layout Shown In The Construction Drawings. Change Orders Will Not Be Authorized So All Estimates Must Be Very Specific.
4. All Work Shall Be Performed During Normal Hours Unless Other Arrangements Are Made And Authorized.

APPLICABLE CODES AND REFERENCES

General

Entire Installation Shall Comply With All Local And State Codes And Other Authorities Having Jurisdiction.

Applicable Codes And References (State Of New Jersey)

1. Building Code: International Building Code (IBC) - 2021 Edition
2. Plumbing Code: National Standard Plumbing Code (NSPC) - 2021 Edition
3. Mechanical Code: International Mechanical Code (IMC) - 2021 Edition
4. Electrical Code: National Electrical Code (NEC) - 2020 Edition
5. Energy Code: ASHRAE 90.1 - 2019
6. Fire / Life Safety Code: New Jersey Uniform Construction Code (UCC)
7. Fire Protection: NFPA Sections 13 & 14 - Latest Adopted Version, NFPA 25, And NFPA 72
8. Fuel Gas Code: International Fuel Gas Code (IFGC) - 2021 Edition
9. ASHRAE Handbooks

Acronym Key

ASHRAE: American Society Of Heating, Refrigerating And Air Conditioning Engineers

IESNA: Illuminating Engineering Society Of North America

NFPA: National Fire Protection Association

SMACNA: Sheet Metal & Air Conditioning Contractors' National Association

SEISMIC DESIGN CRITERIA

Seismic Data

Mapped Spectral Acceleration - Short Periods (SMS):	0.411g
Mapped Spectral Acceleration - 1 Second Period (SM1):	0.170g
Soil Site Classification:	D
Seismic Occupancy Category:	IV
Seismic Design Category:	C

Seismic Requirements

1. This Building Is Classified As Seismic Design Category C Per IBC 2021. Mechanical And Electrical Components And Systems In Buildings That Are Assigned To Seismic Design Category C In Seismic Occupancy Catagory IV Structures Are Not Exempt From Seismic Requirements Per ASCE-7 13.1.4.
2. Provide Seismic Bracing Of Mechanical And Electrical Components And Systems.

DOCUMENT ORGANIZATION

Drawing Organization

The Primary Organization And Order Of The Project Drawing Set Is Determined By The Trade. The Preface Letter(s) Of The Drawing Name Indicates The Trade.
1. General Sheets (G Series)
2. Mechanical (M Series)
3. Electrical (E Series)

Drawing Sequence

1. Within Each Trade, Drawings Start With Overview "Big Picture" Information, Then Plan Views, Followed By All Other Pertinent Information. Where Effective, Supplemental Information Is Included Directly On The Plan View Drawings To Improve The Reader's Understanding.

Miscellaneous

1. The Terms 'Sheet', 'Plan', And 'Drawing' Are Used Interchangeably.
2. For Items That Are Plans, Details, And Other Graphic Items, Titles Are At The Bottom Of The Item Described. For Items That Are Predominately Text Such As Schedules, Titles Are At The Top Of The Item Described.
3. Shading Of An Area Often Is Used To Emphasize An Area To The Reader. Some Of The Possible Purposes Of This Emphasis Can Be:
   - A. Identify Major Pieces Of Equipment
   - B. Defining A Topics Boundary Without Conflicting With Other Linework
   - C. Help To Emphasize The Existence Of A Part Plan Of The Area
   - D. Differentiate Line Work In Congested Areas

How Notes Are Used

1. General Notes Are One Or More Notes In List Form Which Are Not Indicated Specifically On A Plan, Section, Elevation, Or Detail.
2. Key Notes Are Used In Lieu Of Standard Notes Where They Improve Readability, Key Notes Are Gathered Together And Listed Collectively On The Drawings On Which They Are Located.

Addenda & Revisions

Some Addenda And Revisions Are Identified On The Drawings Using A 1. The Number In The Triangle Links To The Revision Block In The Title Block Section.

Sometimes The Most Recent Change Is Clouded To Provide Increased Clarity.

PROJECT GENERAL NOTES

General

1. All General Notes Are To Be Read And Adhered To By Each Contractor. The Notes Are Loosely Categorized By Trade, But This Does Not Limit The Resposibility Of The Contractor To Any Single Category.
2. Entire Installation Shall Comply With All Local And State Codes And Other Authorities Having Jurisdiction.
3. Proper Fire Protection Measures, Satisfactory To The Local Fire Department, Shall Be Taken When Welding Or Cutting With Torches Or Electric Arc. Contractor To Provide Open Flame Permit If Required. A Hot Permit Must Be Obtained From The Owner.
4. All Drawings Are Conceptual And Contractor Shall Provide Construction Drawings For Approval By Owner Prior To Installation.

Coordination

1. Contractor To Visit Job Site And Verify Existing Field Conditions Prior To Submission Of Bid.
2. Contractor Shall Secure And Pay For All Required Permits And Shall Arrange All Required Inspections. This Includes But Is Not Limited To Stack Permits And Low NOx Testing.
3. Contractor Shall Coordinate His Work With The Existing Field Conditions.

Installation

1. Contractor Shall Be Responsible For All Cutting And Patching Of Walls, Ceilings, Roofs And Floors Required As A Result Of His Work.
2. Piping And Duct Layouts Are Schematic Diagrams And Are Intended To Show General Arrangement, Size And Capacity And Do Not Indicate Which Pipe Or Duct Is Above Or Below The Other. All Offsets Are Not Necessarily Shown. Contractor Shall Arrange And Coordinate The Work, Furnish Necessary Offsets, Valves, Vents And Fittings To Avoid Conflict With Other Mechanical And Electrical Services And Structural And Architectural Elements Without Additional Cost To The Owner. If Areas Of Conflict Are Encountered, The Construction Manager Shall Be Notified And Contractors Shall Submit Recommendations For Approval Before Work Has Begun.
3. All Support Systems (Supports, Hangers, Anchors, Guides, Bracing, Fasteners, Welds, Etc.) For Equipment And Systems Installed Or Revised As Part Of This Contract Shall Be Designed, Selected And Installed By The Contractor To Resist All Seismic, Wind And Gravity Loads. The Codes Listed Under The "Design Criteria" Section Of These Documents Have Specific Requirements Concerning The Application Of These Loads As Well As Other Design Requirements. Under Certain Conditions, The Applicable Codes Require These Loads, Or A Combination Of These Loads, Be Considered As "Coincidental". The Contractor Shall Also Be Responsible For Confirming That The Component Of The Building Structure Where These Support Systems Are Attached Is Able To Resist The Design Loads Transferred To This Building Component. The Contractor Is To Provide Seismic Design Drawings And Details From A Seismic Engineer. The Drawings Are To Be Signed And Sealed Per Specifications.
4. All Penetrations Of Floors (Whether Or Not Fire Resistance Rated) And All Penetrations Of Fire Rated Walls And Floors Shall Be Provided With A Through-Penetration Protection System (Firestopping). Each Through-Penetration Protection System Shall Be Tested In Accordance With ASTM E814 And Be Listed For The Type Of Floor Or Wall Assembly Penetrated And The Type Of Installation. Installers Must Be Trained And Certified.
5. Contractor Shall Provide All Necessary Miscellaneous Steel For The Support Of All Equipment, Piping, And Conduit Suspended From Slab, Steel, Wall, Trusswork, And Roof Openings.
6. "Furnish And Install" Or "Provide" Means To Supply, Erect, Install And Connect Up To Complete For Readiness For Regular Operation, The Particular Work Referred To.
7. No Imposed Loads Shall Be Placed On Any New Or Existing Equipment.

MECHANICAL / ELECTRICAL COORDINATION

1. Power Wiring To Mechanical Equipment, Motor Controllers And Control Panels Shall Be Provided By The Electrical Contractor Who Will Be Hired And Work As A Subcontractor To The Mechanical Contractor.
2. Control Wiring Shall Be Provided By The Contractor As Part Of This Project.
3. Motor Controllers, Motor Starters And Disconnects Shall Be Furnished And Installed As Part Of This Project.
4. Disconnect Switches Shall Be Heavy Duty Type With Lockable Handle. Disconnects For All Electrically Driven HVAC Equipment Shall Be Furnished And Installed By The Contractor. One Manufacturer Shall Be Used Throughout The Project. Acceptable Manufacturers Are: Square D, General Electric, Siemens And Westinghouse.
5. Starters Shall Be NEMA Combination Magnetic Motor Starters Sized Per Motor HP, With Integral Red Run Pilot Light And H-O-A Switch. Coordinate Motor Starter Type And Features With The Requirements Of The Mechanical Equipment And The Control System. Provide Overload, Under Voltage And Phase Loss Protection In All Starters. Starters For Motors 50 HP And Larger Shall Be Reduced Voltage Autotransformer Type. One Manufacturer Shall Be Used Throughout The Project. Acceptable Manufacturers Are: Toshiba Or Approved Equal.

General

1. Contractor Shall Ensure That All Mechanical Devices Will Be Installed In A Location Which Affords Accessibility For Maintenance And Repair And Shall Be Approved By Owner Prior To Installation. Coordinate Installation Among All Trades To Avoid Interferences, And Locate Equipment To Provide Clearances Which Exceed Those Recommended By The Equipment Manufacturer. Prior To Project Completion, Representatives Of DLB Associates Will Review Each Installation And Will Direct Changes Whenever Access Or Serviceability Is, In Their Opinion, Unacceptable.

KEY PARTICIPANTS & THEIR ROLES

Owner

North Jersey District Water Supply Commission
One F.A. Orechio Drive
Wanaque, NJ 07465

Contact: Chris Clamser
Email: cclamser@njdwsc.com
Tel: (973) 390-3032

Mechanical / Electrical / Plumbing

DLB Associates
3600 Route 66, Suite 150 - #5981
Neptune, NJ 07753

Contact: Dan Rehberg - Project Manager
Email: drehberg@dlbassociates.com
Tel: (732) 318-0314

DCA REVIEW

No.	Drawing Title	Issues: Issued for Bid and DCA Review 06/23/23	Corrected Fan Model Numbers 07/13/23	Corrected HW Unit Heater Model Numbers & Fan Dampers 07/27/23			
GENERAL INFORMATION FOR ALL TRADES							
G101	General Information Sheet - 1	A					
G102	General Information Sheet - 2	A					
G103	Photo Overview	A					
STRUCTURAL							
S-001	General Structural And Construction Notes	A					
S-101	Partial Existing Slab On Grade Plan And New Exterior Platform Framing Plan	A					
S-102	Partial Existing Roof Framing Plan	A					
PLUMBING							
P101	Boiler Room Demolition Plan	A					
P102	Boiler Room New Work Plan	A					
MECHANICAL							
M101	Building Overview Demolition Plan	A					
M102	Building Overview New Work Plan	A					
M103	Roof New Work Plan	A					
M104	Boiler Room Demolition Plan	A					
M105	Boiler Room New Work Plan	A					
M201	Details - 1	A					
M202	Details - 2	A		C			
M203	Schedules	A	B	C			
M500	Controls Details - 1	A					
M501	Controls Details - 2	A					
ELECTRICAL							
E101	Demolition Plan	A					
E102	New Work Plan	A					
E103	Electrical Notes And Lighting Schedule	A					
E104	Panel Schedules - 1	A					
E105	Panel Schedules - 2	A					

REV.	DATE	ISSUE DESCRIPTION	ITEM	DATE	ISSUE DESCRIPTION
A	6/23/23	ISSUE FOR BID AND DCA REVIEW			

24x36

dlbassociates consulting engineers
3600 Route 66, Suite 150 - #5981
Neptune NJ 07753
Questions For DLB Call: Dan Rehberg
DLB Project ID: 12636 Phone: 732-318-0314

project: NJDWSC WANAQUE SOUTH HVAC & LIGHTING REPLACEMENT 310 FAIRFIELD ROAD WAYNE, NJ 07470

title: GENERAL INFORMATION SHEET - 1

dwg. no. G101

scale	drawn by	checked by	date	filename
AS SHOWN	CAD	DR	06/09/2023	12636G101

This Drawing Is The Property Of DLB Associates Consulting Engineers, PC. It Was Prepared Exclusively For This Particular Project And Is Limited To This Project Only. Unauthorized Reproduction Or Other Use Of These Drawings Or Ideas Is Prohibited.

Confidential and Proprietary / ©DLB Associates 2023

GENERAL STRUCTURAL AND CONSTRUCTION NOTES

1.0 GENERAL

1. All work shall conform to the "2021 International Building Code" and to all other applicable Federal, State, and Local regulations.
2. In case of conflict between the General Notes, Specifications, and details, the most rigid requirements shall govern.
3. Work not indicated on a part of the drawings but reasonably implied to be similar to that shown at corresponding places shall be repeated.
4. Job site safety and construction procedures are the sole responsibility of the Contractor.
5. The Contractor shall provide for dewatering as required during excavation and construction.
6. All costs of investigation and/or redesign due to Contractor improper installation of structural elements or other items not in conformance with the Contract Documents shall be at the Contractor's expense.
7. The structural drawings shall be used in conjunction with the specifications, and mechanical drawings. If there is a discrepancy between drawings, it is the Contractor's responsibility to notify the Engineer prior to performing the work.
8. If the existing field conditions do not permit the installation of the work in accordance with the details shown, the Contractor shall notify the Engineer immediately and provide a sketch of the condition with his proposed modification of the details given on the Contract Documents. Do not commence work until condition is resolved and modification is approved by the Engineer.
9. Shop drawings for all structural materials to be submitted to Engineer for review prior to the start of fabrication or commencement of work. Review period shall be a minimum of two (2) weeks.
10. Reproduction of any portion of the Structural Contract Drawings for resubmittal as shop drawings is prohibited. Shop drawings produced in such a manner will be rejected and returned.
11. Shop drawings submitted for structural review shall consist of two (2) sets of prints and one (1) set of reproducibles. Only one (1) marked up set of reproducible with the Structural Engineer's comments will be returned to the Contractor.
12. Shop drawings shall bear the Contractor's stamp of approval which shall constitute certification that the Contractor has verified all construction criteria, materials, and similar data and has checked each drawing for completeness, coordination, and compliance with the Contract Documents.
13. The shop drawings shall include dimensioned grating edges.
14. The drawings have been produced entirely on MPP Engineers Cadd System. Any other lettering, lines or symbols, other than professional stamps and signatures, have been made without the authorization of MPP Engineers are invalid.
15. The structural drawings shall govern the work for all structural features, unless noted otherwise.
16. All materials shall be stored to protect them from exposure to the elements.

2.0 FOUNDATIONS

1. Foundations have been designed for an allowable bearing capacity and footing elevations established based upon adjacent building information, known information from adjacent sites, and similar soil conditions in the project vicinity. A new Subsurface Investigation Report, with foundation recommendations, has not been provided by the Owner for this project at this time. The soil information and bearing capacity shall be verified by a qualified Geotechnical Engineer during construction.
2. Footings shall bear on undisturbed stratum or engineered fill with a minimum bearing capacity of 1,000 psf.
3. Prior to footing concrete placement, the footing subgrade shall be approved by the inspecting Geotechnical Engineer. If conditions prove to be unacceptable at elevations shown, footing bottoms shall be lowered to acceptable subgrade material. Fill over-excavation with lean concrete (2,500 psi).
4. The bottom of exterior footings shall be a minimum of 4'-6" below finished grade, or as required by Local building codes.
5. Concrete for foundations shall be poured on the same day the subgrade is approved by the Geotechnical Engineer.
6. The Contractor shall observe water conditions at the site and take the necessary precautions to ensure that the foundation excavations remain dry during construction. Any sheeting or shoring required for dewatering shall be the responsibility of the Contractor.
7. The Contractor shall be responsible for coordinating the need to use foundation rebar as a grounding electrode system and shall be responsible for installing the bonding clamp prior to placement of the concrete as per NJUCC Bulletin No. 02-2.

3.0 CAST-IN-PLACE CONCRETE

1. Concrete shall be designed and detailed in accordance with the Building Code Requirements for Structural Concrete (ACI-318-08), and constructed in accordance with the CRSI Manual of Standard Practice.
2. Concrete shall have a minimum compressive 28-day strength of 5,000 psi. Air Entrainment 5.5% to 8% in all exposed concrete work.
3. Maximum water/cement ratios:
   A. Foundations 0.44
4. All concrete shall be normal weight concrete (144 pcf +) with all cement conforming to ASTM C150, Type I. Maximum aggregate size shall be 1½" for footings and ¾" for walls and slabs, conforming to ASTM C33.
5. Reinforcing steel: ASTM A615 Grade 60.
6. Submit to Engineer reinforcing steel shop drawings for approval and mix designs for review prior to placing any concrete.
7. All reinforcement shall be securely held in place while placing concrete. If required, additional bars, stirrups or chairs shall be provided by the Contractor to furnish support for all bars.
8. Placing of concrete shall not start until the placement of reinforcing has been approved by the Inspection Agency.
9. Concrete shall not be pumped through aluminum pipes and shall not be placed in contact with aluminum forms, mixing drums, buggies, chutes, conveyors or other equipment made of aluminum.
10. All inserts and sleeves shall be cast-in-place.
11. Chamfer all exposed concrete corners unless noted otherwise.
12. Early drying out of concrete, especially during the first 24 hours, shall be carefully guarded against. All surfaces shall be moist cured or protected using a membrane curing agent applied as soon as forms are removed. If membrane curing agent is used, exercise care not to damage coating.
13. Cold weather concreting shall be in accordance with ACI-306. Hot weather concreting shall be in accordance with ACI-305R.
14. Throughout construction, the concrete work shall be adequately protected against damage due to excessive loading, construction equipment, materials or methods, ice, rain, snow, excessive heat, and freezing temperatures.

4.0 STRUCTURAL STEEL

1. Fabrication and erection of structural steel shall conform to the "Steel Construction Manual", Thirteenth Edition, 2005, American Institute of Steel Construction including Specifications for Structural Steel Buildings, Specification for Structural Joints Using ASTM A325 or A490 Bolts, and AISC Code of Standard Practice except Sections 4.2 and 7.9 which shall not be applicable to this project.
2. All welding shall be performed by certified welders and shall conform to "Structural Welding Code ANSI/AWS D1.1-92", American Welding Society.
3. Wide flange shapes: ASTM A992 or A572, Grade 50.
4. Structural shapes & plates: ASTM A36, A572 or A992.
5. Galvanized structural steel:
   A. Structural shapes and rods ASTM A123.
   B. Bolts, fasteners and hardware ASTM A153.
6. All bolted connections shall be with ASTM A325 high strength bolts ¾" minimum diameter, unless noted otherwise.
7. Welding electrodes shall be E70XX for manual arc welding and F7X-EXXX for submerged arc welding. All welders shall be certified by the AWS. Minimum weld size shall be 3/16" unless noted otherwise.
8. Submit shop drawings for fabrication and erection of structural steel. Clearly indicate coordinated dimensions of mechanical unit and roof penetration sizes. Shop and Erection drawings must show all shop/floor and field welds. Initial shop drawing submittal shall include proposed connection details and job standards. Provide signed and sealed calculations for all non-standard connection details showing design capacities.
9. Alternate connection details may be used if such details are submitted to the engineer for review and approval. However, the engineer shall be the sole judge of acceptance and the Contractor's bid shall anticipate the use of those details shown on the drawings. The Contractor is responsible for the design of such alternate details which he proposes.
10. All exterior exposed structural steel shall be hot-dipped galvanized per ASTM A123.
11. Field welded surfaces within four (4) inches of weld shall be cleaned and ground smooth. After welding coat the exposed area with galvanizing repair paint. Galvanizing repair paint shall be a high zinc dust content paint complying with Federal Specifications DOD-P-21035A or SSPC-Paint-20, Cold Galvanizing Compound by ZRC Products Co. or equal.
12. Steel grating shall be manufactured in accordance with the Metal Bar Grating Manual by the National Association of Architectural Metal Manufacturers and shall conform to Federal Specification RR-G-661E, Type I, Class I. Steel for grating shall be ASTM A569. All grating shall be galvanized and attached with removable type fasteners.
13. Visually inspect all fillet welds.

5.0 DESIGN DATA

1. Governing Code: International Building Code 2021
2. Platforms Live Load:
   Catwalks Uniform.....60 PSF
3. Snow Load
   Pg (Ground Snow Load).....30 PSF
4. Wind Load:
   A. Basic Wind Speed.....128 MPH
   B. I (Wind Importance Factor).....1.0
   C. Wind Exposure.....C
   D. Wind Direction.....As per the Code
5. Special Loads:
   A. Dead Loads:
      1. Materials Of Construction
         i. Framing.....2 PSF
         ii. Grating.....10 PSF
      2. Fixed Service Equipment
         i. Mechanical Equipment –.....SEE PLAN

DCA REVIEW

REV.	DATE	ISSUE DESCRIPTION	ITEM	DATE	ISSUE DESCRIPTION
1	4/14/23	ISSUED FOR REVIEW			

24x36

dlbassociates consulting engineers
3600 Route 66, Suite 100 - #5981
Neptune NJ 07753
Questions For DLB Call: Dan Rehberg
DLB Project ID: 22-02 Phone: 732-318-0314

MPP Engineers LLC
34 S Main St
Allentown, NJ 08501
Phone: (609) 489-5511
DELCHO G. PALECHEV
PROFESSIONAL ENGINEER, N.J. LIC. No.48732

PROJECT
NJDWSC WANAQUE SOUTH
HVAC & LIGHTING REPLACEMENT
310 FAIRFIELD ROAD
WAYNE, NJ 07470

TITLE
GENERAL NOTES

SCALE	DRAWN BY	CHECKED BY	DATE	FILENAME
AS SHOWN	MPP	DGP	04/06/2023	22-0272 WSPS

DWG. NO.
S-001

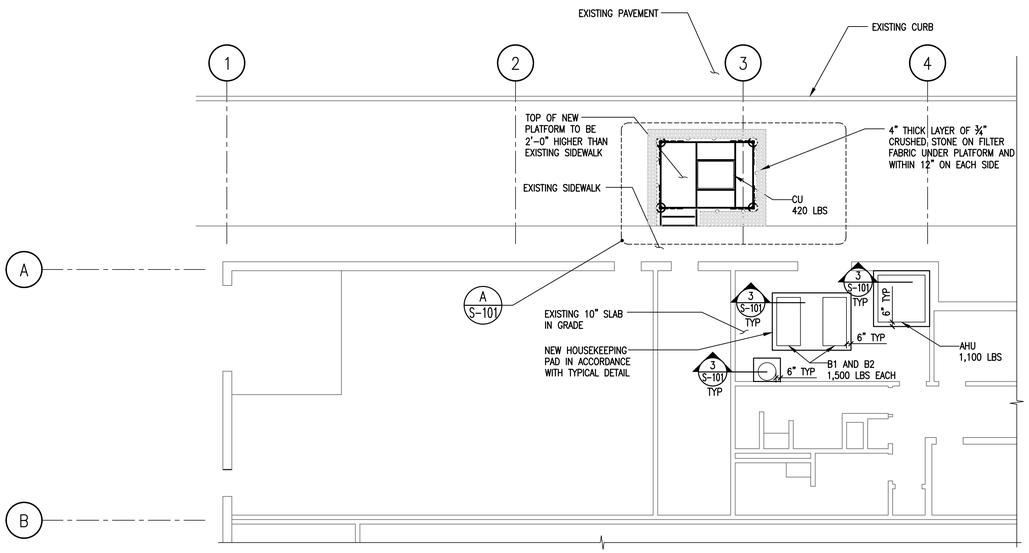

PARTIAL EXISTING SLAB ON GRADE PLAN AND NEW EXTERIOR PLATFORM FRAMING PLAN

SCALE: 1/8" = 1'-0" (DO NOT SCALE PLAN)

NOTES:

1. THE GC SHALL FIELD VERIFY LOCATIONS OF ALL EXISTING UTILITIES PRIOR TO EXCAVATION. HAND EXCAVATE WITHIN 2' OF ANY EXISTING UTILITY LINES.

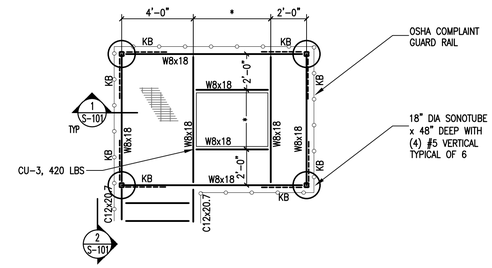

A S-101 PLATFORM FRAMING PLAN

SCALE: 1/4" = 1'-0" (DO NOT SCALE PLAN)

NOTES:

1. ALL PLATFORM STEEL SHALL BE HOT DIPPED GALVANIZED.
2. (G) DENOTES SPAN OF 1"x 3/16" GALVANIZED STEEL BAR GRATING. TACK WELD GRATING TO SUPPORTS.
3. KB – DENOTES L3x3x¼ KNEE BRACE
4. THE GC SHALL OBTAIN MANUFACTURER'S DRAWINGS FOR EQUIPMENT SHOWN AND VERIFY ALL DIMENSIONS ASSOCIATED WITH SUPPORT OF EQUIPMENT SHOWN THUS (*) ON PLAN WITH ACTUAL SIZE OF PURCHASED EQUIPMENT PRIOR TO FABRICATING STEEL.
5. THE GC SHALL FIELD VERIFY LOCATIONS OF ALL EXISTING UTILITIES PRIOR TO EXCAVATION. HAND EXCAVATE WITHIN 2' OF ANY EXISTING UTILITY LINES.

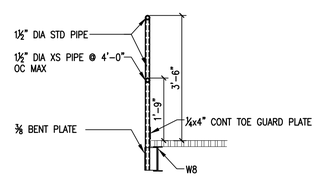

1 S-101 SECTION

SCALE: 1/2" = 1'-0"

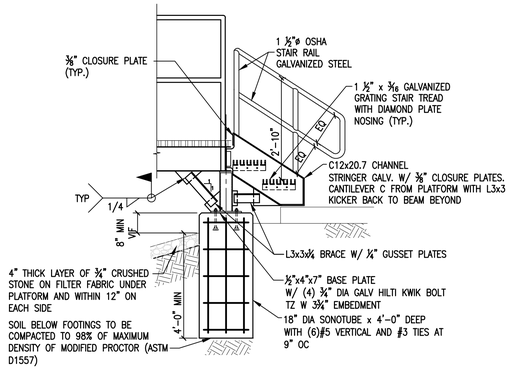

2 S-101 SECTION

SCALE: 1/2" = 1'-0"

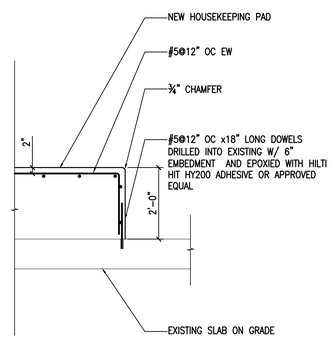

3 S101 SECTION

SCALE: 1/2" = 1'-0"

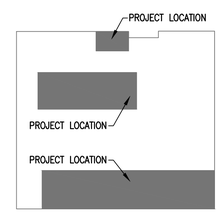

KEY PLAN

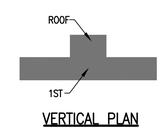

VERTICAL PLAN

DCA REVIEW

REV.	DATE	ISSUE DESCRIPTION	ITEM	DATE	ISSUE DESCRIPTION
1	4/14/23	ISSUED FOR REVIEW			

24x36

dlbassociates consulting engineers
3600 Route 66, Suite 130 - #5981
Neptune NJ 07753
Questions For DLB Call: Dan Rehberg
DLB Project ID: 22-02 Phone: 732-318-0314

MPP Engineers LLC
34 S Main St
Allentown, NJ 08501
Phone: (609) 489-5511
DELCHO G. PALECHEV
PROFESSIONAL ENGINEER, N.J. LIC. No.48732

PROJECT
NJDWSC WANAQUE SOUTH
HVAC & LIGHTING REPLACEMENT
310 FAIRFIELD ROAD
WAYNE, NJ 07470

TITLE
PARTIAL EXISTING SLAB ON GRADE PLAN AND NEW EXTERIOR PLATFORM FRAMING PLAN AND SECTIONS

SCALE	DRAWN BY	CHECKED BY	DATE	FILENAME
AS SHOWN	MPP	DGP	04/06/2023	22-0272 WSPS

DWG. NO.
S-101

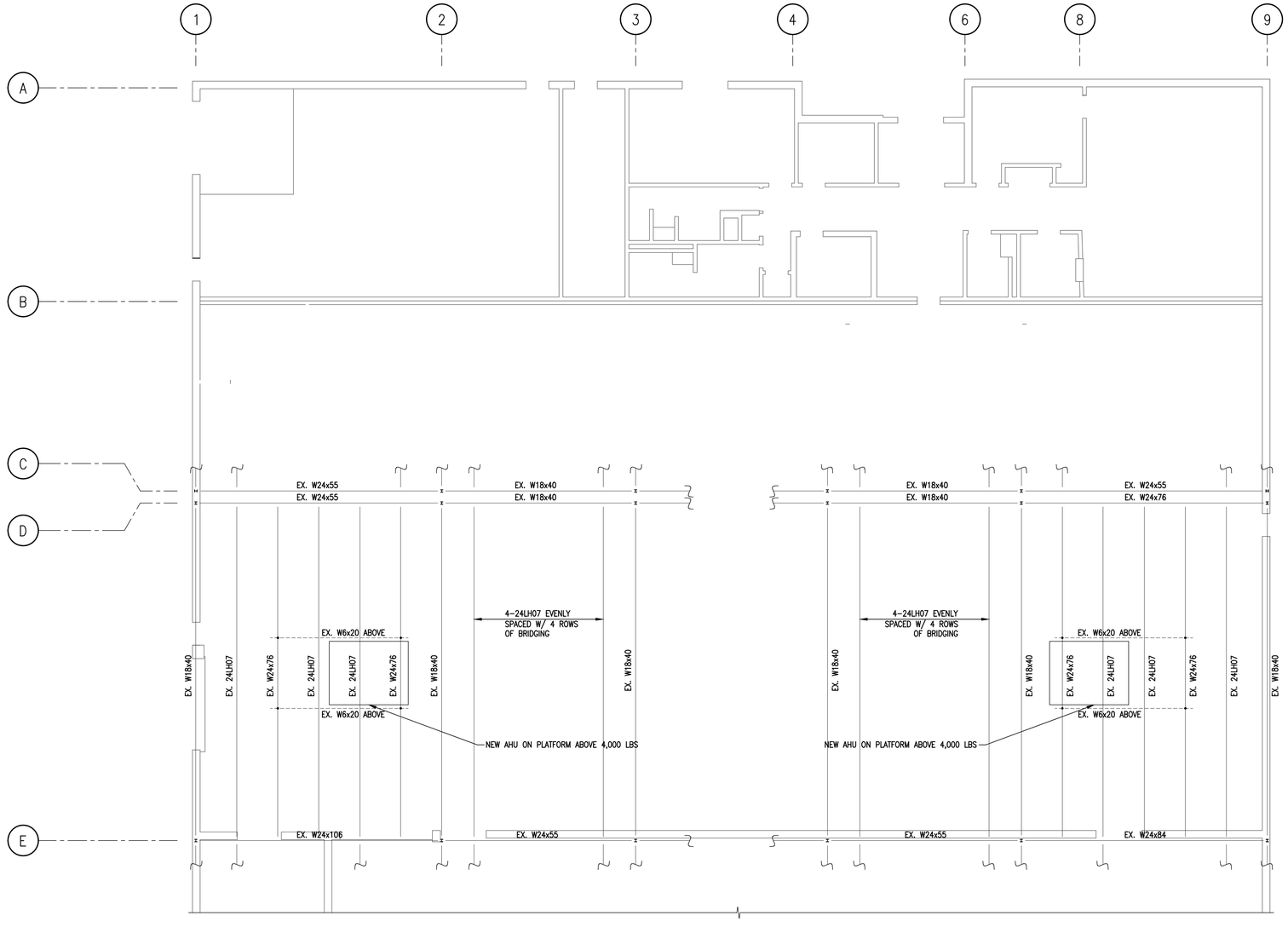

PARTIAL EXISTING ROOF FRAMING PLAN

SCALE: 1/8" = 1'-0" (DO NOT SCALE PLAN)

NOTES:

1. EXISTING FRAMING & SIZES SHOWN FOR REFERENCE ONLY AND ARE BASED ON AVAILABLE EXISTING DRAWINGS. GC SHALL VERIFY ALL EXISTING, SIZES, CONDITIONS AND DIMENSIONS SHOWN PRIOR TO FABRICATION AND INSTALLATION OF STEEL AND BRING ANY CONFLICTS OR DISCREPANCIES TO THE IMMEDIATE ATTENTION OF THE ENGINEER.

DCA REVIEW

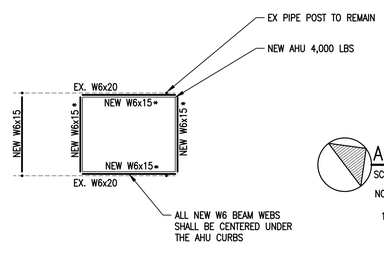

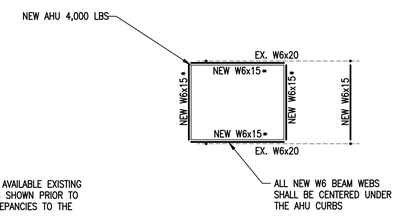

AHU ROOF TOP SUPPORT FRAMING PLAN

SCALE: 1/8" = 1'-0" (DO NOT SCALE PLAN)

NOTES:

1. EXISTING FRAMING & SIZES SHOWN FOR REFERENCE ONLY AND ARE BASED ON AVAILABLE EXISTING DRAWINGS. GC SHALL VERIFY ALL EXISTING, SIZES, CONDITIONS AND DIMENSIONS SHOWN PRIOR TO FABRICATION AND INSTALLATION OF STEEL AND BRING ANY CONFLICTS OR DISCREPANCIES TO THE IMMEDIATE ATTENTION OF THE ENGINEER.
2. ALL NEW STEEL SHALL BE PAINTED WITH TWO COATS OF CARBOGUARD 890 BY CARBOLINE OR APPROVED EQUAL. CLEAN AND PAINT EXISTING W6 BEAMS AND PIPE POSTS WITH ONE COAT OF CARBOGUARD 890 BY CARBOLINE OR APPROVED EQUAL.
3. THE GC SHALL OBTAIN MANUFACTURER'S DRAWINGS FOR EQUIPMENT SHOWN AND VERIFY ALL DIMENSIONS ASSOCIATED WITH SUPPORT OF EQUIPMENT SHOWN THUS (*) ON PLAN WITH ACTUAL SIZE OF PURCHASED EQUIPMENT PRIOR TO FABRICATING STEEL.

REV.	DATE	ISSUE DESCRIPTION	ITEM	DATE	ISSUE DESCRIPTION
1	4/14/23	ISSUED FOR REVIEW			

dlbassociates consulting engineers
3600 Route 66, Suite 100 - #5981
Neptune NJ 07753
Questions For DLB Call: Dan Rehberg
DLB Project ID: 22-02 Phone: 732-318-0314

MPP Engineers LLC
34 S Main St
Allentown, NJ 08501
Phone: (609) 489-5511
DELCHO G. PALECHEV
PROFESSIONAL ENGINEER, N.J. LIC. No.48732

PROJECT
NJDWSC WANAQUE SOUTH
HVAC & LIGHTING REPLACEMENT
310 FAIRFIELD ROAD
WAYNE, NJ 07470

TITLE
PARTIAL EXISTING ROOF FRAMING PLAN

SCALE	DRAWN BY	CHECKED BY	DATE	FILENAME
AS SHOWN	MPP	DGP	04/06/2023	22-0272 WSPS

DWG. NO.
S-102

24x36

GENERAL SYMBOL LIST

Identifier	Description
1	Keynote Symbol
2	Keynote With Leader
3 4	Multiple Keynotes Applying To The Same Item
	Connect To Existing
	Disconnect From Existing
	Existing Equipment
	Demo Equipment
	New Equipment
	Detail Identifier
E4 01	Drawing # (Detail Location) Detail #
	Section Identifier
E4 02	Drawing # (Detail Location) Detail #
	Elevation Identifier
M2 02	Drawing # (Detail Location) Detail #
XXX XX	Equipment Type Equipment Number

GENERAL NOTE:
1. Symbols And Abbreviations Lists Are Shown For General Reference Only. The Presence Of A Symbol Or Abbreviation Does Not Imply Its Use On This Project. Refer To Drawings For Specific Symbols Used.

GENERAL ABBREVIATIONS

Identifier	Description	Identifier	Description
A	Amps	MC	Mechanical Contractor
AFF	Above Finished Floor	MCA	Minimum Circuit Amps
AFG	Above Finished Grade	MFR	Manufacturer
BFG	Below Finished Grade	MH	Mounting Height
BLDG	Building	MIN	Minimum
BOB	Bottom Of Beam	MTD	Mounted
CL	Center Line	NIC	Not In Contract
CLG	Ceiling	NTS	Not To Scale
CO	Company	OC	On Center
CONTR	Contractor	PC	Plumbing Contractor
DIA, Ø	Diameter	PSI	Pounds Per Square Inch
DEG, °	Degrees	PVC	Polyvinyl Chloride
DN	Down	R	Existing Equipment To Be Removed
DWG(S)	Drawing(s)	RL	Existing Equipment To Be Relocated
EC	Electrical Contractor	RLA	Running Load Amps
EM	Emergency	RPM	Revolutions Per Minute
EQUIP	Equipment	SDD	Smoke Duct Detector
ETR	Existing To Remain	SQ. FT., SF	Square Feet
EX	Existing	T	Thermostat
FLA	Full Load Amps	TRF	Transfer Fan
FS	Flow Switch	TS	Tamper Switch
FT	Feet	TYP	Typical
GC	General Contractor	UNO	Unless Noted Otherwise
HP	Horsepower	VAV	Variable Air Volume
IN	Inches	VFD	Variable Frequency Drive
K	Thousand		
LRA	Locked Rotor Amps		
MAX	Maximum		

MECHANICAL SYMBOL LIST

Identifier	Description
CD	Air Conditioning Condensate Drain
HWS	Heating Water Supply
HWR	Heating Water Return
	New Piping
	Existing Piping To Remain
	Existing Piping To Be Removed
	Pipe Riser
	Pipe Drop On Direction Of Flow
	Capped Pipe
	Direction Of Flow
P	Pitch Of Pipe (Down)
	Reducer / Increaser
	Pipe Vibration Isolator
	Pipe Anchor
	Pipe Guide
	Union Or Flanged Connection, As Required
	Gate Valve
	Butterfly Valve
	Check Valve
	Ball Valve
	Lubricated Plug Cock / Gas Cock
	Adjustable Pressure Relief Valve
	Calibrated Orifice Balancing Valve
	Balancing Valve
	Control Valve
	Automatic Air Vent With Ball Valve
	Manual Drain (Ball Valve With Hose Connection And Cap)
	Manual Air Vent (Ball Valve W/ U-Bend, Hose Connection And Cap)
	Pressure Gauge With Ball Valve
	Thermometer And Well
	Strainer With Full Size Blow Down Ball Valve, Hose Connection & Cap
	New Ductwork
	Existing Ductwork To Remain
	Existing Ductwork To Be Removed
	Insulated Flexible Duct
	Volume Damper
M	Motorized Damper
X XXX	Diffuser / Register / Grille Number, CFM
CFM, ∮	Cubic Feet Per Minute
	Supply Air Flow
	Exhaust Air Flow
	4 Way Ceiling Diffuser
	3 Way Ceiling Diffuser
	2 Way Ceiling Diffuser
	1 Way Ceiling Diffuser
	Floor Diffuser (With Damper)
	Exhaust Grille / Return Register
	Supply Duct Up
	Return / Exhaust Duct Up
	Supply Duct Down
	Return / Exhaust Duct Down
T	Thermostat

MECHANICAL ABBREVIATIONS

Identifier	Description	Identifier	Description
AD	Access Door	MAU	Make Up Air Unit
BTU	British Thermal Units	MBH	Thousand BTU Per Hour
CD	Ceiling Diffuser	MOD	Motor Operated Damper
CFM	Cubic Feet Per Minute	OA	Outside Air
COND	Air Conditioning Condensate	OAI	Outside Air Intake
CR	Ceiling Register	OPNG	Opening
CU	Condensing Unit	OPWT	Operating Weight
DB	Dry Bulb	PSI	Pounds Per Square Inch
EAT	Entering Air Temperature	RA	Return Air
EF	Exhaust Fan	RG	Return Grille
EG	Exhaust Grille	RTU	Rooftop Unit
ESP	External Static Pressure	SC	Self Contained Control Valve
EWB	Entering Wet Bulb	SD	Smoke Damper
FDAD	Fire Damper And Access Door	SDD	Smoke Duct Detector
FD	Fire Damper	SR	Supply Register
FSD	Fire Smoke Damper	TA	Transfer Assembly
FPM	Feet Per Minute	TO	Transfer Opening
G	Gas	TT	Thermostatic Trap
GPM	Gallons Per Minute	UV	Unit Ventilator
HVAC	Heating, Ventilation, And Air Conditioning	VIC	Vibration Isolation Connection
LAT	Leaving Air Temperature	WC	Water Column
		WG	Water Gauge

ELECTRICAL SYMBOL LIST

Identifier	Description
	Electrical Conduit
	Electrical Conduit Run Concealed Via Floors, Walls, Underground
	Conduit Homerun
	Conduit Turned Up
	Conduit Turned Down
	Conduit End (Capped)
	Duplex Receptacle, 20A, 120V
GFI	Ground Fault Interrupting Receptacle, 20A, 120V
GFI	Ground Fault Interrupting, Mounted High Or Above Counter Duplex Receptacle, 20A, 120V
	Mounted High Or Above Counter Duplex Receptacle, 20A, 120V
J	Junction Box, Wall Or Ceiling Mtd
or	Panel Board, Flush Or Surface Mtd
	Unfused Safety Switch - Sized Per Equipment Requirements
	Motor
	Combination Motor Starter

DCA REVIEW

ELECTRICAL ABBREVIATIONS

Identifier	Description	Identifier	Description
A	Amp(s)	MOCP	Maximum Overcurrent Protection
AC	Alternating Current	MV	Medium Voltage (> 600V)
AF	Amp Frame	N	Neutral (Grounded Circuit Conductor)
AIC	Amps Interrupting Capacity (RMS Symmetrical Amperes)	NC	Normally Closed
AFI, AFCI	Arc Fault Current Interrupter	NEC	National Electrical Code
AT	Amp Trip	NEMA	National Electrical Manufacturer's Assoc.
ATS	Automatic Transfer Switch	NO	Normally Open
C	Conduit	NL	Night Light
CB	Circuit Breaker	PH, ϕ	Phase
CT	Current Transformer	PF	Power Factor
DC	Direct Current	PRI	Primary
EMT	Electrical Metallic Tubing	PNL	Panel
EWC	Electric Water Cooler	RECEPT	Receptacle
FACP	Fire Alarm Control Panel	RGS	Rigid Galvanized Steel
G, GND	Ground	SEC	Secondary
GFI, GFCI	Ground Fault Circuit Interrupter	SCP	Security Control Panel
HV	High Voltage (> 69,000V)	STP	Shielded Twisted Pair
IG	Isolated Ground	SWBD	Switchboard
IMC	Intermediate Metal Conduit	TEL	Telephone
JB, J	Junction Box	TBB	Telephone Backboard
KCMIL	Thousand Circular Mil	TMCC	Temperature Motor Control Center
LRA	Locked Rotor Amps	UTP	Unshielded Twisted Pair
LV	Low Voltage (< 50V)	V	Volt
MC	Metal Clad Cable	VA	Volt-Ampere
MCB	Main Circuit Breaker	VAR	Volt-Ampere Reactive
MCC	Motor Control Center	W	Watts
MDP	Main Distribution Panel	WP	Weatherproof
MDS	Main Distribution Switchboard	XFMR	Transformer
MLO	Main Lugs Only		

This Drawing Is The Property Of DLB Associates Consulting Engineers, PC. It Was Prepared Exclusively For This Particular Project And Is Limited To This Project Only. Unauthorized Reproduction Or Other Use Of These Drawings Or Ideas Is Prohibited.

24x36

REV.	DATE	ISSUE DESCRIPTION	ITEM	DATE	ISSUE DESCRIPTION
A	6/23/23	ISSUE FOR BID AND DCA REVIEW			

dlbassociates consulting engineers
3600 Route 66, Suite 150 - #5981
Neptune NJ 07753
Questions For DLB Call: Dan Rehberg
DLB Project ID: 12636 Phone: 732-318-0314

project
NJDWSC WANAQUE SOUTH
HVAC & LIGHTING REPLACEMENT
310 FAIRFIELD ROAD
WAYNE, NJ 07470

title
GENERAL INFORMATION SHEET - 2

scale	drawn by	checked by	date	filename
AS SHOWN	CAD	DR	06/09/2023	12636G102

dwg. no.
G102

Confidential and Proprietary / ©DLB Associates 2023

PHOTO A

Existing Hot Water Boiler, Pumps, Air Handler, Controls, And All Accessories To Be Replaced.

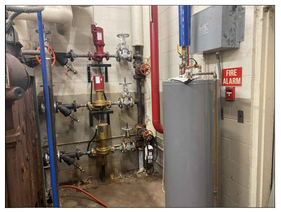

PHOTO B

Existing Inline Hot Water Pumps To Be Replaced. Existing Domestic Hot Water To Be Relocated To File Room And Be Reinstalled On New 24" High Concrete Housekeeping Pad.

PHOTO C

Existing Power And Controls For HVAC Units To Be Removed.

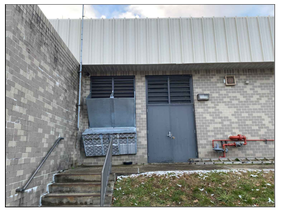

PHOTO D

Existing Louvers And Ductwork For Interior Condensing Unit To Be Removed. Portion Of Louver To Be Reused For Outside Air Intake On New Air Handler. Unused Portions To Be Sealed.

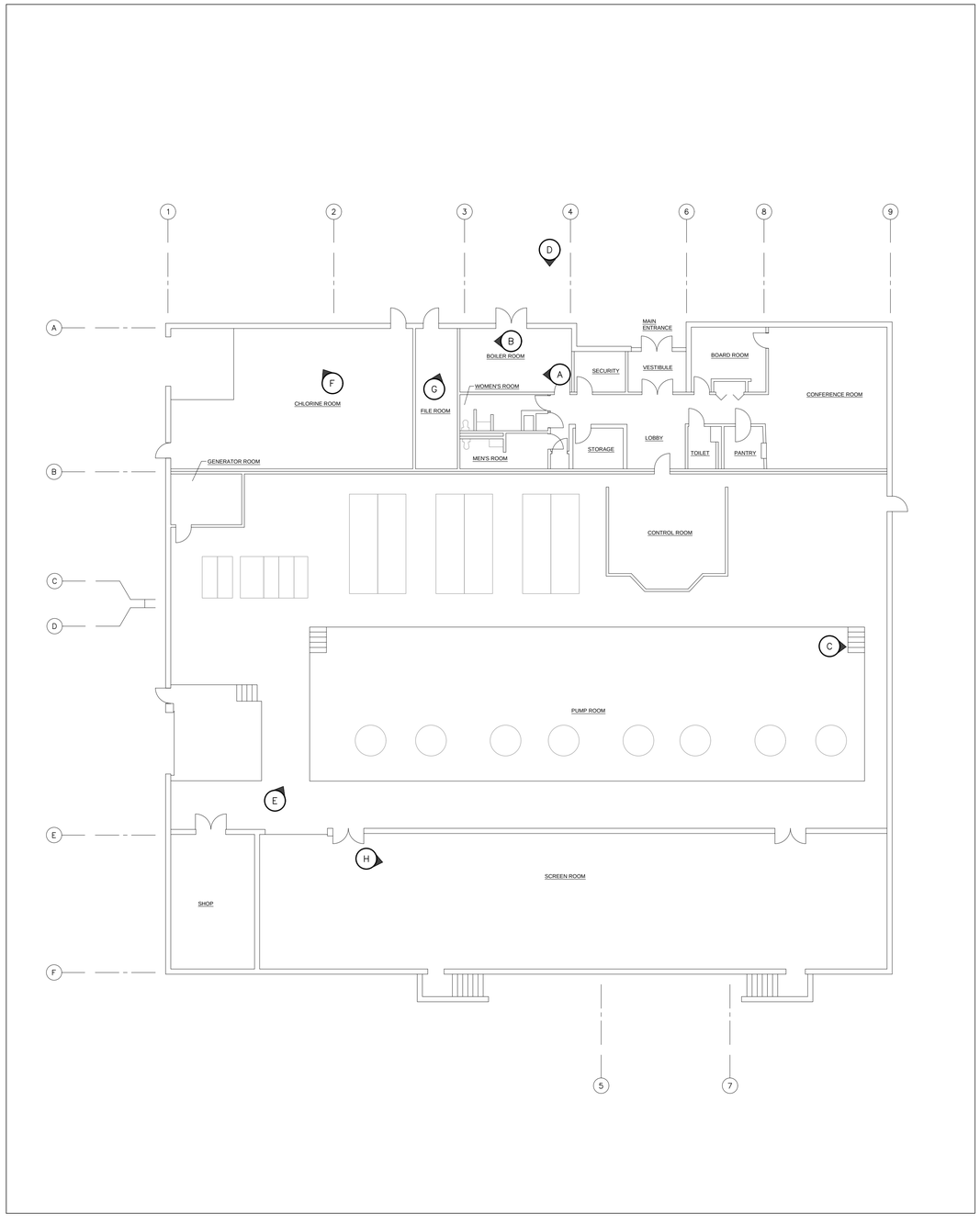

PHOTO E

Existing Heating Only Rooftop Air Handlers To Be Replaced. Existing Steel Dunnage To Remain.

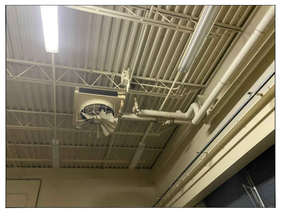

PHOTO F

Existing Vertical Hot Water Unit Heaters To Be Replaced.

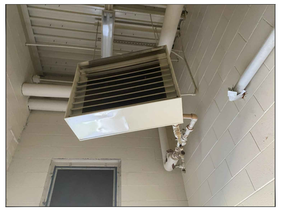

PHOTO G

Existing Horizontal Hot Water Unit Heaters To Be Replaced.

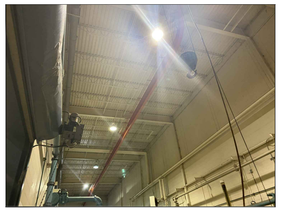

PHOTO H

Existing Screen Room Lighting To Be Replaced.

DCA REVIEW

This Drawing Is The Property Of DLB Associates Consulting Engineers, PC. It Was Prepared Exclusively For This Particular Project And Is Limited To This Project Only. Unauthorized Reproduction Or Other Use Of These Drawings Or Ideas Is Prohibited.

24x36

REV.	DATE	ISSUE DESCRIPTION	ITEM	DATE	ISSUE DESCRIPTION
A	6/23/23	ISSUE FOR BID AND DCA REVIEW			

dlbassociates consulting engineers
3600 Route 66, Suite 150 - #5981
Neptune NJ 07753
Questions For DLB Call: Dan Rehberg
DLB Project ID: 12636 Phone: 732-318-0314

project
NJDWSC WANAQUE SOUTH
HVAC & LIGHTING REPLACEMENT
310 FAIRFIELD ROAD
WAYNE, NJ 07470

title
PHOTO OVERVIEW

scale	drawn by	checked by	date	filename
AS SHOWN	CAD	DR	06/09/2023	12636G103

dwg. no.
G103

Confidential and Proprietary / ©DLB Associates 2023

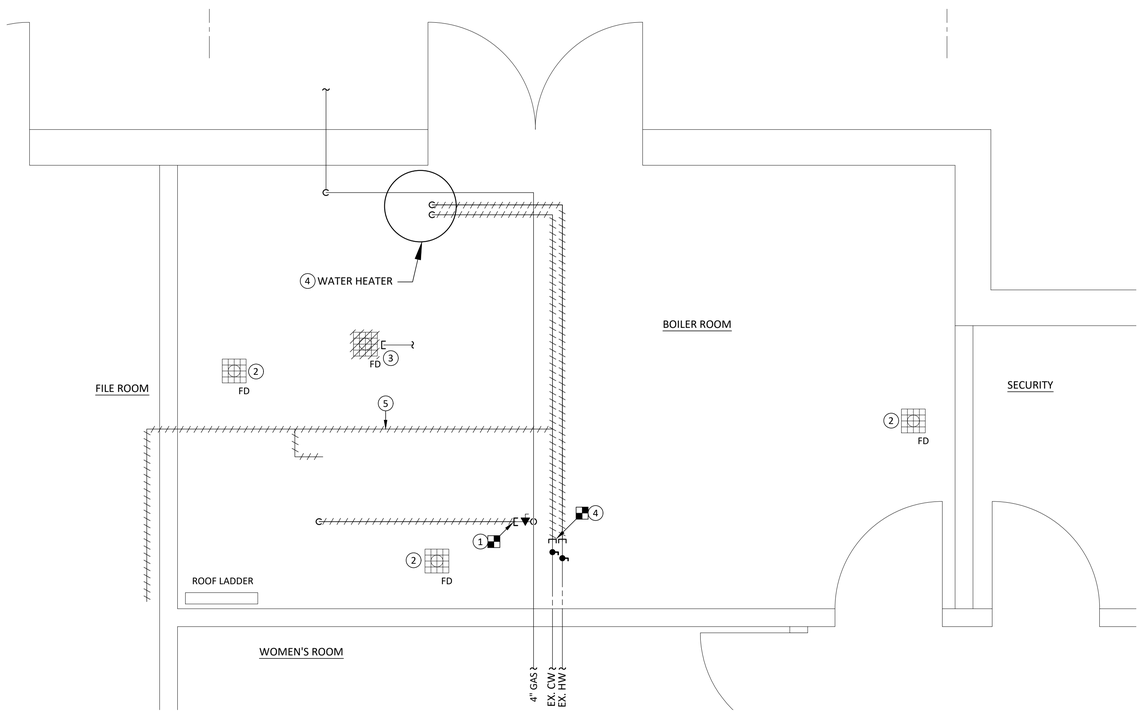

KEY NOTES (SYMBOLS 1, 2, ETC.)

1. Existing Gas Piping To Be Removed Up To Points Shown And Capped And Ready For Connection To New Equipment.
2. Existing Floor Drain To Remain. Openings Shall Be Protected During Construction. Floor Drain And Piping Shall Be Scoped And Cleaned. See Specification For Additional Information.
3. Existing Floor Drain Shall Be Removed Prior To Pouring New Equipment Pads. Existing Underfloor Sanitary Piping Shall Be Cut Back To Main And Capped.
4. Existing Water Heater To Be Relocated. Domestic Water Piping Shall Be Removed Up To Points Shown And Capped And Ready For Connection To New Location. Provide New Line Size Shutoff Valves.
5. Existing Domestic Water Piping For Expansion Tanks To Be Removed.

DCA REVIEW

GENERAL NOTES

1. Prior To Start Of Demolition Work, The Contractor Shall Coordinate Construction Schedule With NJDWSC Engineering Staff.
2. To The Best Of Our Knowledge The Boiler Contains No Asbestos. Contractor Shall Test Boiler And Provide Reports To NJDWSC Engineering Staff Prior To Starting Demolition Work.

PARTIAL SYMBOLS & ABBREVIATIONS

Identifier	Description
	Disconnect From Existing
	Existing Equipment
	Demo Equipment
	Existing Piping To Remain
	Existing Piping To Be Removed
	Pipe Riser
	Pipe Drop On Direction Of Flow
	Capped Pipe
	Ball Valve
	Automatic Air Vent With Ball Valve

Identifier	Description
CW	Cold Water
EX	Existing
HWR	Hot Water Return
HWS	Hot Water Supply
NIC	Not In Contract
M	Water Meter Assembly
	Floor Drain

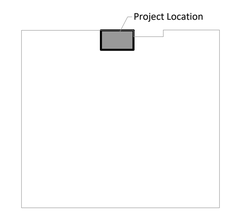

KEY PLAN

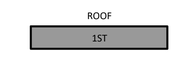

VERTICAL PLAN

MECHANICAL ROOM PART PLAN

Scale: 1/2"=1'-0"

6" 1' 2' 4'

Drawing: P101
Detail: 01

REV.	DATE	ISSUE DESCRIPTION	ITEM	DATE	ISSUE DESCRIPTION
A	6/23/23	ISSUE FOR BID AND DCA REVIEW			

24x36

dlbassociates consulting engineers
3600 Route 66, Suite 150 - #5981
Neptune NJ 07753
Questions For DLB Call: Dan Rehberg
DLB Project ID: 12636 Phone: 732-318-0314

project
NJDWSC WANAQUE SOUTH
HVAC & LIGHTING REPLACEMENT
310 FAIRFIELD ROAD
WAYNE, NJ 07470

title
PLUMBING DEMOLITION
PARTIAL PLANS

scale	drawn by	checked by	date	filename
AS SHOWN	CAD	DR	06/09/2023	12636P101

dwg. no.
P101

This Drawing Is The Property Of DLB Associates Consulting Engineers, PC. It Was Prepared Exclusively For This Particular Project And Is Limited To This Project Only. Unauthorized Reproduction Or Other Use Of These Drawings Or Ideas Is Prohibited.

Confidential and Proprietary / ©DLB Associates 2023

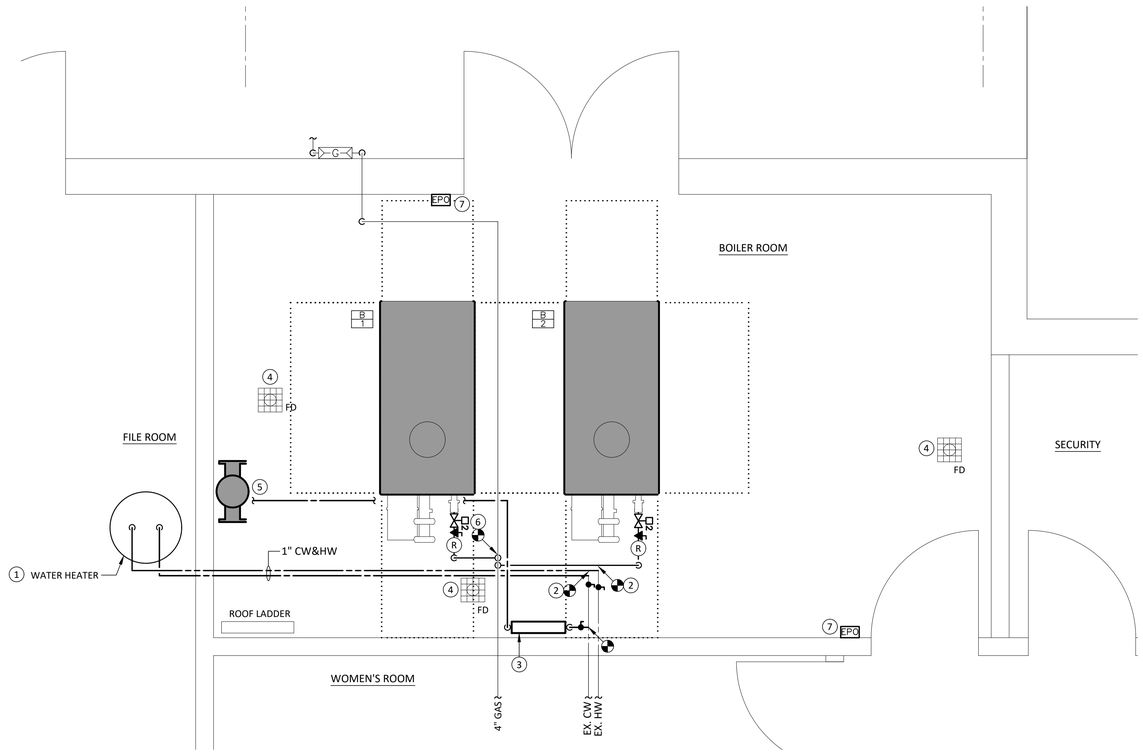

MECHANICAL ROOM PART PLAN | Scale: 1/2"=1'-0" | 6" 1' 2' 4' | Drawing: **P102** | Detail: **01**

KEY NOTES (SYMBOLS 1, 2, ETC.)

1. Provide New 24" High Concrete Pad A Minimum Of 4" Around The Perimeter Of Relocated Water Heater. See Structural Plans For Additional Information.
2. Domestic Water Piping Shall Be Modified To Accommodate New Water Heater Location.
3. Provide New RPZ Assembly, Conbraco Model 40-200 Or Approved Equal. See Detail For Additional Information.
4. Existing Floor Drains Shall Be Scoped And Cleaned After Construction Is Complete.
5. Cold Water Make-up To Air Separator. See Mechanical Plans For Additional Information.
6. Provide New 2" Gas Piping To Each Boiler. Provide 1-1/2" Solenoid Valve Model WP8210 By Asco Or Approved Equal. Solenoid Valve Shall Close Upon Activation Of The EPO Switches.
7. See Electrical Plans For Additional Information On EPO Switches.

DCA REVIEW

GENERAL NOTES

1. Contractor Is Responsible For Field Verification Of All Conditions And New Piping Tie-In Locations, And Is Also Responsible For Reporting Any Conflicts To The Engineer Prior To The Start Of Work.
2. It Is The Responsibility Of The Plumbing Contractor To Verify All Equipment Connections, Based On Current Plumbing Conditions.
3. Provide Reduced Pressure Backflow Preventers At All Domestic Water Connections To Mechanical Equipment As Required By Local Code Authorizes. Backflow Preventers Are To Be Located Within A Minimum Of 1'-0" Clearance At The Lowest Point And Located No More Than 5'-0" Above Floor At The Highest Point Of The Device.
4. All Pipe Penetrations Of Fire And/ Or Smoke Rated Assemblies Shall Be Fire Stopped As Required To Restore Assembly To Original Integrity.

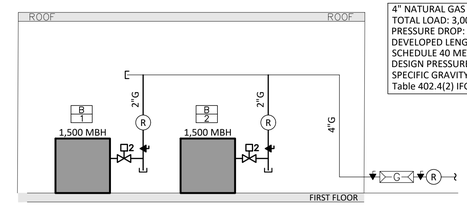

4" NATURAL GAS SUPPLY
TOTAL LOAD: 3,000 MBH
PRESSURE DROP: 0.5" W.C.
DEVELOPED LENGTH: 50 FT.
SCHEDULE 40 METALLIC PIPE
DESIGN PRESSURE: LESS THAN 2 PSI
SPECIFIC GRAVITY: 0.60
Table 402.4(2) IFGC 2021

GAS RISER DIAGRAM | Scale: NTS | Drawing: **P102** | Detail: **02**

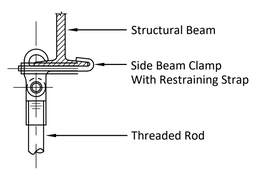

Beam Clamp Hanger

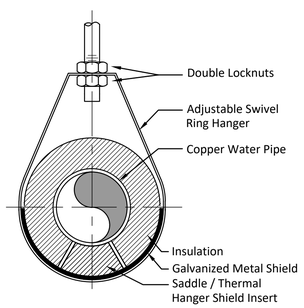

For 2" Pipe And Smaller

Domestic Cold Water	Insulation Thickness
0 To 4 Inches	3/4 Inch
Domestic Hot Water	**Insulation Thickness**
0 To 1-1/4 Inches	1 Inch
1-1/2 To 3 Inches	1-1/2 Inches

	Horizontal Support		Shield Data	
Pipe Size (Inches)	Spacing (Feet)	Rod Size (inches)	Length (Inches)	Thickness (USSG)
A	B	C	D	E
0 To 3/4	5	3/8	12	18
1 To 1-1/4	6	3/8	12	18
1-1/2 To 2	8	3/8	12	18
2-1/2	9	1/2	12	18
3	10	1/2	12	16
4	12	5/8	12	16

DOMESTIC WATER PIPE SUPPORTS | Scale: NTS | Drawing: **P102** | Detail: **03**

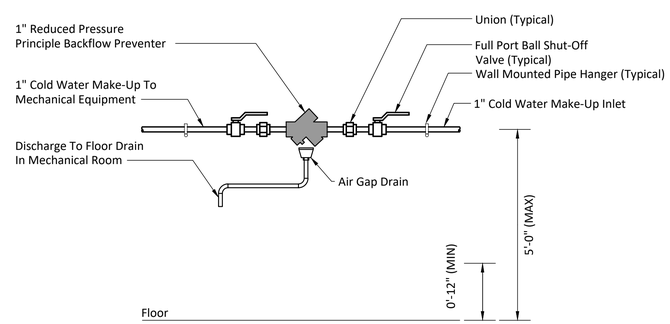

DETAIL OF COLD WATER MAKE-UP | Scale: NTS | Drawing: **P102** | Detail: **04**

PARTIAL SYMBOLS & ABBREVIATIONS

Identifier	Description
	Connect To Existing
	Existing Equipment
	New Equipment
	Capped Pipe
	Ball Valve
	Pipe Drop On Direction Of Flow
	Floor Drain

Identifier	Description
CW	Cold Water
EPO	Emergency Power Off
G	Natural Gas
HW	Hot Water
NIC	Not In Contract
RPZ	Reduced Pressure Zone Assembly

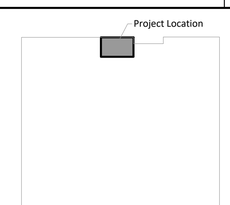

KEY PLAN

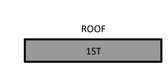

VERTICAL PLAN

REV.	DATE	ISSUE DESCRIPTION	ITEM	DATE	ISSUE DESCRIPTION
A	6/23/23	ISSUE FOR BID AND DCA REVIEW			

24x36

dlbassociates consulting engineers
3600 Route 66, Suite 150 - #5981
Neptune NJ 07753
Questions For DLB Call: Dan Rehberg
DLB Project ID: 12636 Phone: 732-318-0314

project: NJDWSC WANAQUE SOUTH HVAC & LIGHTING REPLACEMENT 310 FAIRFIELD ROAD WAYNE, NJ 07470

title: BOILER ROOM NEW WORK PLANS

scale	drawn by	checked by	date	filename
AS SHOWN	CAD	DR	06/09/2023	12636P102

dwg. no. P102

This Drawing Is The Property Of DLB Associates Consulting Engineers, PC. It Was Prepared Exclusively For This Particular Project And Is Limited To This Project Only. Unauthorized Reproduction Or Other Use Of These Drawings Or Ideas Is Prohibited.

Confidential and Proprietary / ©DLB Associates 2023

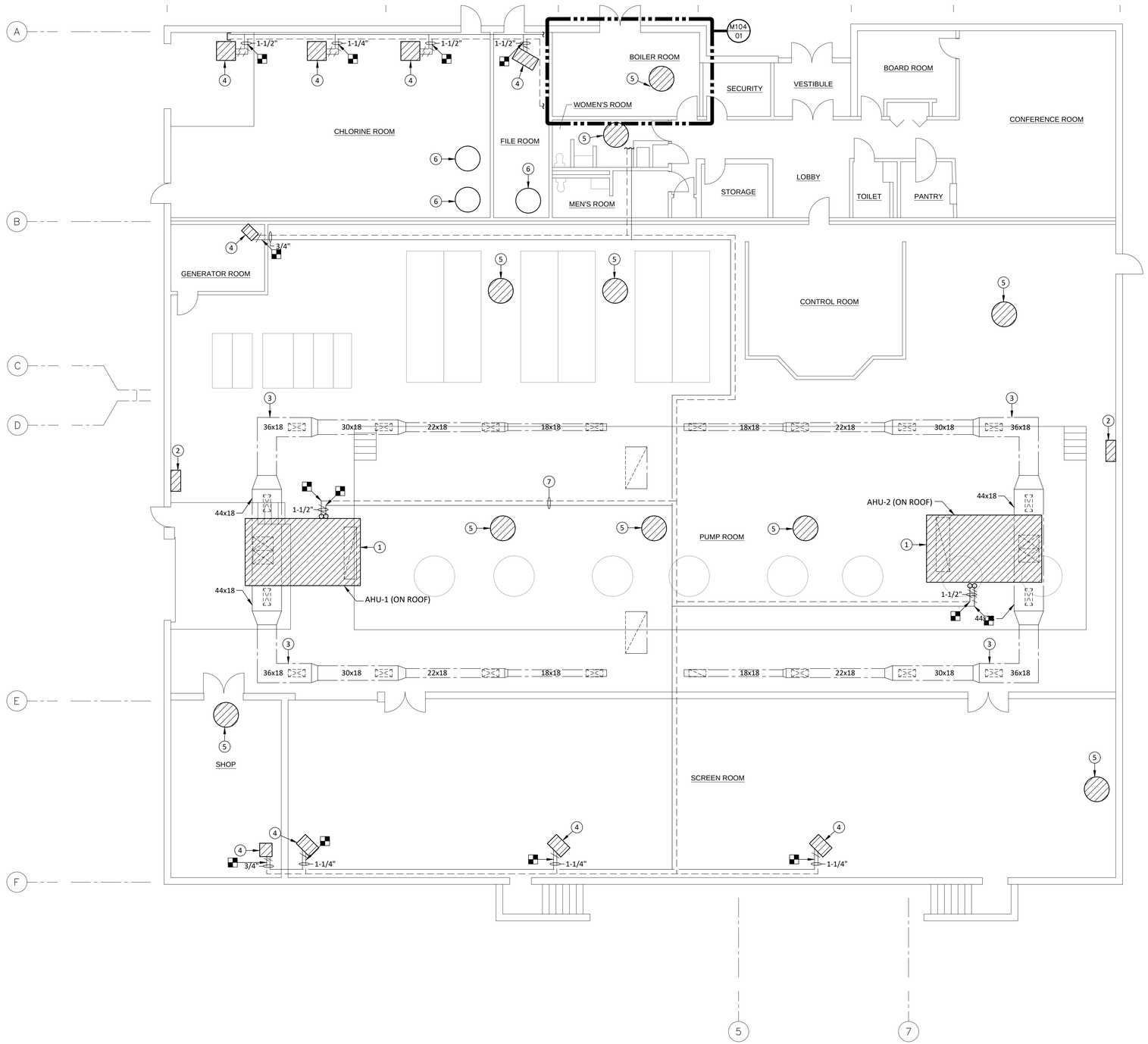

KEY NOTES (SYMBOLS 1, 2, ETC.)

1. Existing Air Handler Mounted On Roof To Be Removed. Seal Openings Weather Tight Until Ready For Installation Of New Equipment. Hot Water Piping To Be Removed Past Existing Shutoff Valves. Existing Piping To Remain To Be Capped And Ready For Connection To New Systems.
2. Existing Air Handler Control Panels To Be Removed.
3. Existing Ductwork To Remain. Provide Option Pricing To Clean Ductwork.
4. Existing Unit Heaters, Hangers, And Controls To Be Removed. Hot Water Piping To Be Removed Past Existing Shutoff Valves. Existing Piping To Remain To Be Capped And Ready For Connection To New Systems.
5. Existing Roof Mounted Exhaust Fans To Be Removed. Seal Opening Weather Tight Until Ready For Installation Of New Equipment.
6. Existing Roof Mounted Exhaust Fans To Remain.
7. Existing Hot Water Supply And Return Piping, Insulation, And Hangers To Remain.

DCA REVIEW

GENERAL NOTES

1. Prior To Start Of Demolition Work, The Contractor Shall Coordinate Construction Schedule With NJDWSC Engineering Staff.

PARTIAL SYMBOLS & ABBREVIATIONS

Identifier	Description
	Disconnect From Existing
	Existing Equipment
	Demo Equipment
	Existing Piping To Remain
	Existing Piping To Be Removed

Identifier	Description
EX	Existing
HWR	Hot Water Return
HWS	Hot Water Supply
NIC	Not In Contract

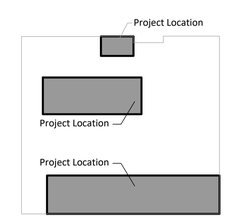

KEY PLAN

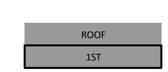

VERTICAL PLAN

FLOOR PLAN

Scale: 1/8"=1'-0"

2' 4' 8' 16'

Drawing: M101
Detail: 01

REV.	DATE	ISSUE DESCRIPTION	ITEM	DATE	ISSUE DESCRIPTION
A	6/23/23	ISSUE FOR BID AND DCA REVIEW			

24x36

dlbassociates consulting engineers
3600 Route 66, Suite 150 - #5981
Neptune NJ 07753
Questions For DLB Call: Dan Rehberg
DLB Project ID: 12636 Phone: 732-318-0314

project
NJDWSC WANAQUE SOUTH
HVAC & LIGHTING REPLACEMENT
310 FAIRFIELD ROAD
WAYNE, NJ 07470

title
BUILDING OVERVIEW
DEMOLITION PLAN

scale	drawn by	checked by	date	filename
AS SHOWN	CAD	DR	06/09/2023	12636M101

dwg. no.
M101

This Drawing Is The Property Of DLB Associates Consulting Engineers, PC. It Was Prepared Exclusively For This Particular Project And Is Limited To This Project Only. Unauthorized Reproduction Or Other Use Of These Drawings Or Ideas Is Prohibited.

Confidential and Proprietary / ©DLB Associates 2023

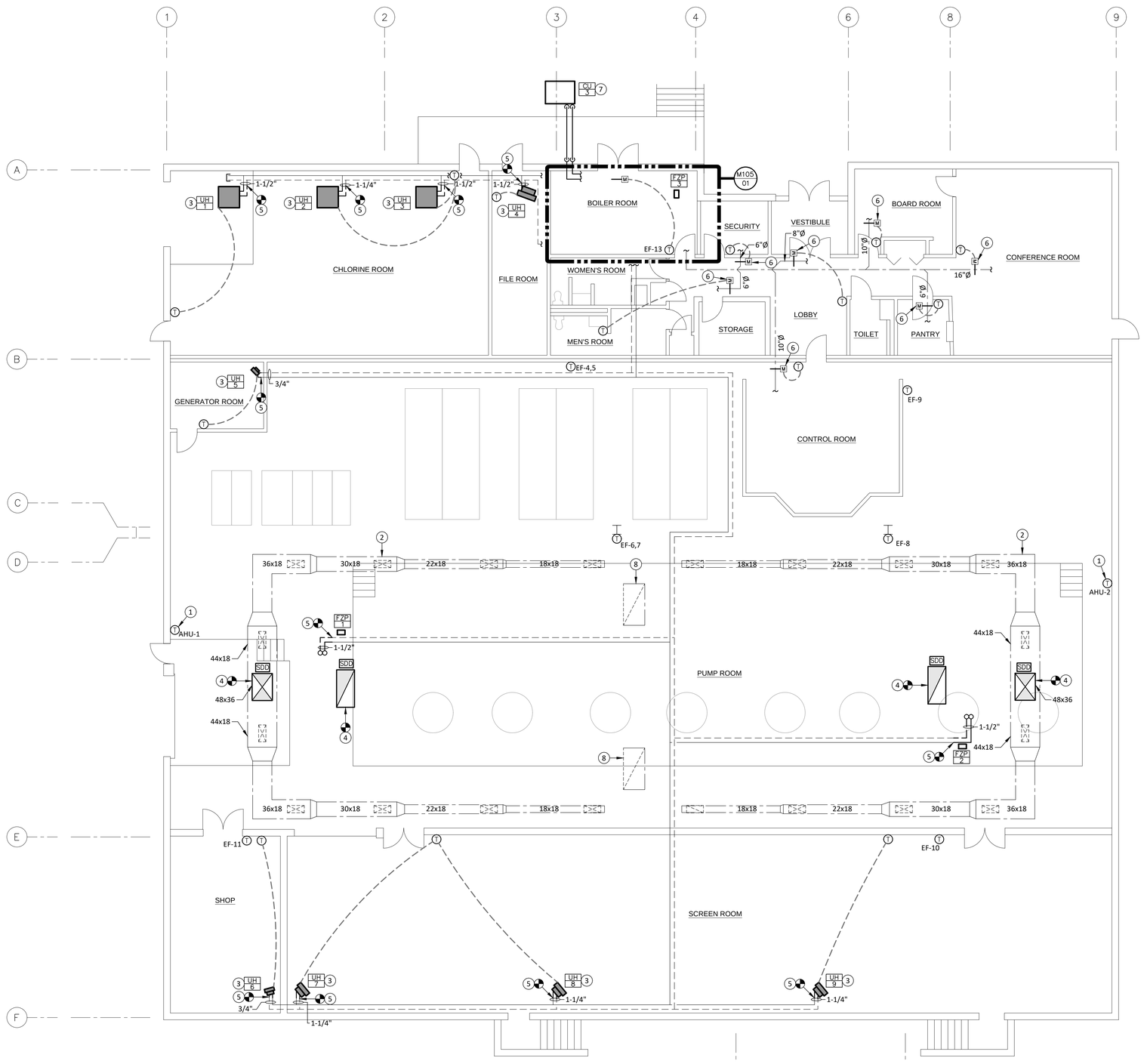

KEY NOTES (SYMBOLS 1, 2, ETC.)

1. Graphical Touchscreen With Programmable Thermostat To Provide Weekly Occupied / Unoccupied Scheduling And Interface With All Unit Controls. Coordinate Final Mounting Location With Owner Prior To Installation.
2. Existing Ductwork To Remain. Provide Option Pricing To Clean Ductwork.
3. New Unit Heater. See Details For Mounting And Hot Water Piping Connections.
4. Connect Ductwork In Pump Room To New Ductwork From New Rooftop Air Handlers. Provide Wire Mesh Screen On Return.
5. Connect Hot Water Piping And Insulation To Existing Systems. Provide All Accessories Per Detail.
6. Provide New Motorized Damper And Connect To Existing Ductwork.
7. Install New Condensing Unit On New Steel Platform. See Structural Plan For Additional Information. Refrigerant Piping Shall Be Routed Over Sidewalk A Minimum Of 8'-0" Above Grade.
8. Existing Relief Louver To Remain.

DCA REVIEW

GENERAL NOTES

1. Make All Necessary Duct Connections To HVAC Units, Exhaust Fans, Exhaust Hoods, Etc.
2. Contractor Shall Verify All Specific Manufacturer Requirements For All Equipment Prior To Installation.
3. All Roof Mounted Equipment, Unless Otherwise Noted, Shall Be Curb Mounted And Must Be Installed Level. Verify Roof Pitch With Architectural Drawings.
4. All Roof Mounted Equipment Shall Be Located As To Be In Compliance With All Local Sight And Sound Restrictions.
5. All Exhaust Fans, Flues And Outlets Shall Be Located A Minimum Of 10'-0" From Any Fresh Air Intake.
6. All Space & Duct Temperature/Humidity Sensors Are To Be Provided, And Installed By Mechanical Contractor. Electrical Contractor To Wire Controls, Mechanical Contractor To Wire All Final Connections.
5. Mechanical Contractor Is Responsible For Coordinating With Fire Protection, Plumbing And Electrical Conditions For Duct Routing.
6. Each Contractor Shall Be Responsible For All Cutting And Patching Of Walls, Ceilings, And Floors Required As A Result Of His Work.
7. Each Contractor Shall Be Responsible For All Preparation And Clean-Up Work Associated With His Scope Of Work.
8. Ductwork Shall Be Constructed In Accordance With SMACNA Low And Medium Pressure "HVAC" Duct Construction Standards Metal And Flexible.
9. Duct Sizes Shown Are Clear Inside Dimensions. Internally Lined Ducts Shall Be Increased In Size To Maintain The Same Internal Size.
10. Provide Double Thickness Turning Vanes In All Square Elbows.

PARTIAL SYMBOLS & ABBREVIATIONS

Identifier	Description
	Connect To Existing
	Existing Equipment
	New Equipment On Roof
	New Equipment
T	Thermostat
	Existing Ductwork

Identifier	Description
AHU	Air Handling Unit
SDD	Smoke Duct Detector
UH	Unit Heater

KEY PLAN

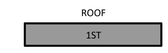

VERTICAL PLAN

FLOOR PLAN | Scale: 1/8"=1'-0" | 2' 4' 8' 16' | Drawing: M102 | Detail: 01

REV.	DATE	ISSUE DESCRIPTION	ITEM	DATE	ISSUE DESCRIPTION
A	6/23/23	ISSUE FOR BID AND DCA REVIEW			

24x36

dlbassociates consulting engineers
3600 Route 66, Suite 150 - #5981
Neptune NJ 07753
Questions For DLB Call: Dan Rehberg
DLB Project ID: 12636 Phone: 732-318-0314

project: NJDWSC WANAQUE SOUTH HVAC & LIGHTING REPLACEMENT 310 FAIRFIELD ROAD WAYNE, NJ 07470

title: BUILDING OVERVIEW NEW WORK PLAN

scale	drawn by	checked by	date	filename
AS SHOWN	CAD	DR	06/09/2023	12636M102

dwg. no. M102

This Drawing Is The Property Of DLB Associates Consulting Engineers, PC. It Was Prepared Exclusively For This Particular Project And Is Limited To This Project Only. Unauthorized Reproduction Or Other Use Of These Drawings Or Ideas Is Prohibited.

Confidential and Proprietary / ©DLB Associates 2023

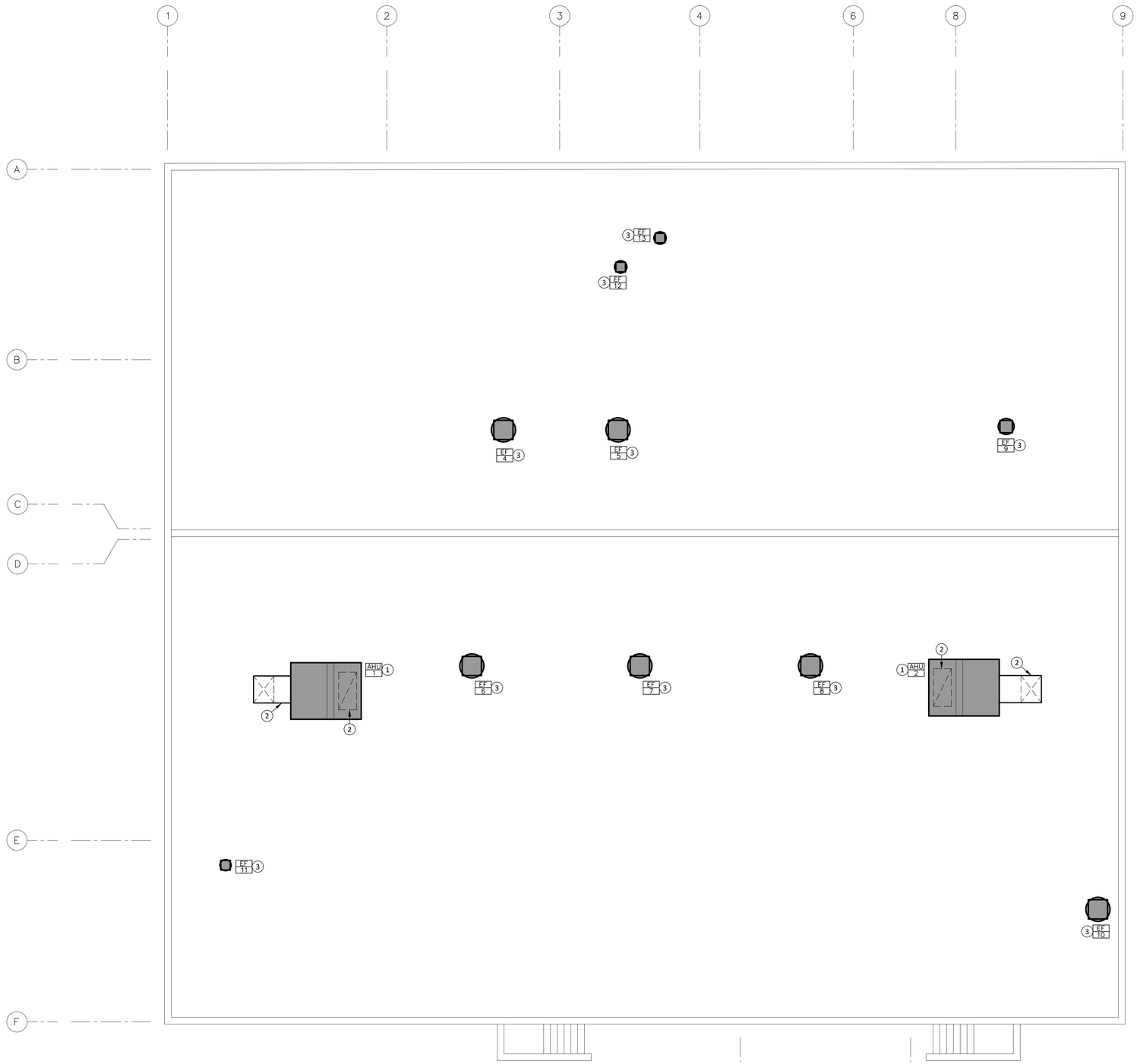

ROOF PLAN Scale: 1/8"=1'-0" (2' 4' 8' 16')

Drawing: **M103**
Detail: **01**

KEY NOTES (SYMBOLS 1, 2, ETC.)

1. Air Handler Mounted On Roof. See Structural Plans For Modifications To Existing Steel.
2. Transition New Ductwork To Drop Through Existing Opening And Connect To Ductwork In Pump Room.
3. New Roof Mounted Exhaust Fan. Install On Existing Curb With Adaptor.

DCA REVIEW

GENERAL NOTES

1. Make All Necessary Duct Connections To HVAC Units, Exhaust Fans, Exhaust Hoods, Etc.
2. Contractor Shall Verify All Specific Manufacturer Requirements For All Equipment Prior To Installation.
3. All Roof Mounted Equipment, Unless Otherwise Noted, Shall Be Curb Mounted And Must Be Installed Level. Verify Roof Pitch With Field Conditions.
4. All Roof Mounted Equipment Shall Be Located As To Be In Compliance With All Local Sight And Sound Restrictions.
5. All Exhaust Fans, Flues And Outlets Shall Be Located A Minimum Of 10'-0" From Any Fresh Air Intake.
6. All Space & Duct Temperature/Humidity Sensors Are To Be Provided, And Installed By Mechanical Contractor. Electrical Contractor To Wire Controls, Mechanical Contractor To Wire All Final Connections.
5. Mechanical Contractor Is Responsible For Coordinating With Fire Protection, Plumbing And Electrical Conditions For Duct Routing.
6. Each Contractor Shall Be Responsible For All Cutting And Patching Of Walls, Ceilings, And Floors Required As A Result Of His Work. All Work On Roof Shall Be Repaired To Like New Conditions.
7. Each Contractor Shall Be Responsible For All Preparation And Clean-Up Work Associated With His Scope Of Work.
8. Ductwork Shall Be Constructed In Accordance With SMACNA Low And Medium Pressure "HVAC" Duct Construction Standards Metal And Flexible.
9. Duct Sizes Shown Are Clear Inside Dimensions. Internally Lined Ducts Shall Be Increased In Size To Maintain The Same Internal Size.
10. Provide Double Thickness Turning Vanes In All Square Elbows.

PARTIAL SYMBOLS & ABBREVIATIONS

Identifier	Description
	Connect To Existing
	Existing Equipment
	New Equipment On Roof
	New Equipment
T	Thermostat
	Existing Ductwork

Identifier	Description
AB	Air Blower
AHU	Air Handling Unit
UH	Unit Heater

KEY PLAN

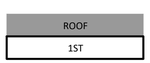

VERTICAL PLAN

REV.	DATE	ISSUE DESCRIPTION	ITEM	DATE	ISSUE DESCRIPTION
A	6/23/23	ISSUE FOR BID AND DCA REVIEW			

24x36

dlbassociates consulting engineers
3600 Route 66, Suite 150 - #5981
Neptune NJ 07753
Questions For DLB Call: Dan Rehberg
DLB Project ID: 12636 Phone: 732-318-0314

project
NJDWSC WANAQUE SOUTH
HVAC & LIGHTING REPLACEMENT
310 FAIRFIELD ROAD
WAYNE, NJ 07470

title
BUILDING OVERVIEW
NEW WORK ROOF PLAN

scale	drawn by	checked by	date	filename
AS SHOWN	CAD	DR	06/09/2023	12636M103

dwg. no.
M103

This Drawing Is The Property Of DLB Associates Consulting Engineers, PC. It Was Prepared Exclusively For This Particular Project And Is Limited To This Project Only. Unauthorized Reproduction Or Other Use Of These Drawings Or Ideas Is Prohibited.

Confidential and Proprietary / ©DLB Associates 2023

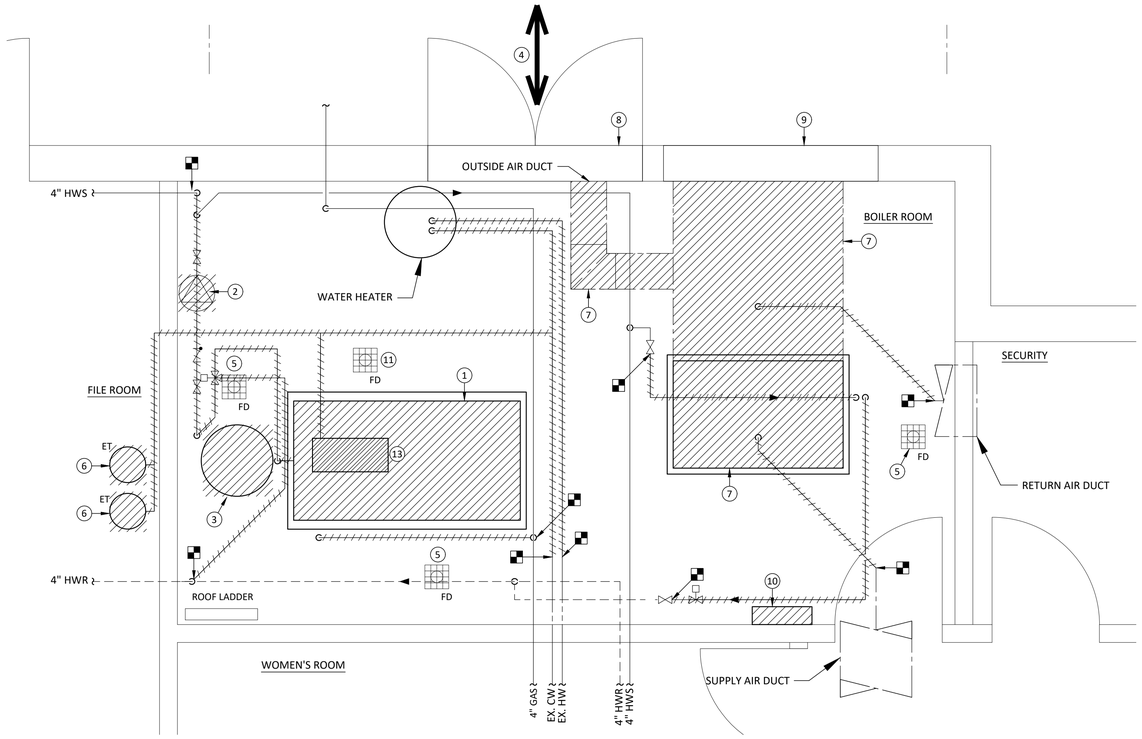

MECHANICAL ROOM PART PLAN | Scale: 1/2"=1'-0" | 6" 1' 2' 4' | Drawing: **M104** | Detail: **01**

KEY NOTES (SYMBOLS ①, ②, ETC.)

1. Existing Boiler And All Hot Water, Gas, Breeching, And Electrical Connections To Be Removed Up To Points Shown. Existing Pad Shall Be Removed Down To Floor Level. Self Leveling Concrete Shall Be Used To Match Existing Floor Level.
2. Existing Pumps, Expansion Tank, Supports, And Hot Water Piping To Be Removed Up To Points Shown. Existing Piping To Remain To Be Capped And Ready For Connection To New Systems.
3. Existing Breeching Shall Be Removed Completely Up To, And Including, Cap On Roof. Openings Shall Be Sealed Weather Tight Until Ready For Installation Of New Breeching.
4. Proposed Rigging Pathway. Any Modifications To Existing Doors Required For Rigging Shall Be Repaired To Like New Condition.
5. Existing Floor Drain To Remain. Openings Shall Be Protected During Construction. Floor Drain And Piping Shall Be Scoped And Cleaned.
6. Existing Expansion Tanks Located In File Room To Be Removed. Domestic Cold Water Piping To Be Removed Up To Points Shown. Existing Piping To Remain To Be Capped And Ready For Connection To New Systems.
7. Existing Air Handler, Ductwork, And Louvers To Be Removed. Existing Pad Shall Be Removed Down To Floor Level. Self Leveling Concrete Shall Be Used To Match Existing Floor Level.
8. Existing Outside Air Louver Shall Remain. Louver Shall Be Cleaned After Demolition Work Is Completed.
9. Existing Condenser Intake And Discharge Ductwork And All Filters And Ductwork On Building Exterior To Be Removed. Existing Upper 72" Wide x 36" High Louver Shall Remain And Be Cleaned After Demolition Work Is Completed. Remaining Louver Sections Shall Be Removed And Opening Closed Up With Brick To Match Existing Conditions.
10. Existing Air Handler Control Panel And All Wiring To Be Removed.
11. Existing Floor Drain Shall Be Closed And Sealed Prior To Pouring New Equipment Pads.
12. Existing Water Heater To Be Relocated. Domestic Water Piping Shall Be Removed Up To Points Shown And Capped And Ready For Connection To New Location.
13. Existing Ceiling Mounted Expansion Tank And All Supports To Be Removed. Domestic Cold Water Piping And Accessories To Be Removed Up To Points Shown. Existing Piping To Remain To Be Capped And Ready For Connection To New Systems.

DCA REVIEW

GENERAL NOTES

1. Prior To Start Of Demolition Work, The Contractor Shall Coordinate Construction Schedule With NJDWSC Engineering Staff.
2. Contractor Shall Test Boiler For Hazardous Materials And Provide Reports To NJDWSC Engineering Staff Prior To Starting Demolition Work.

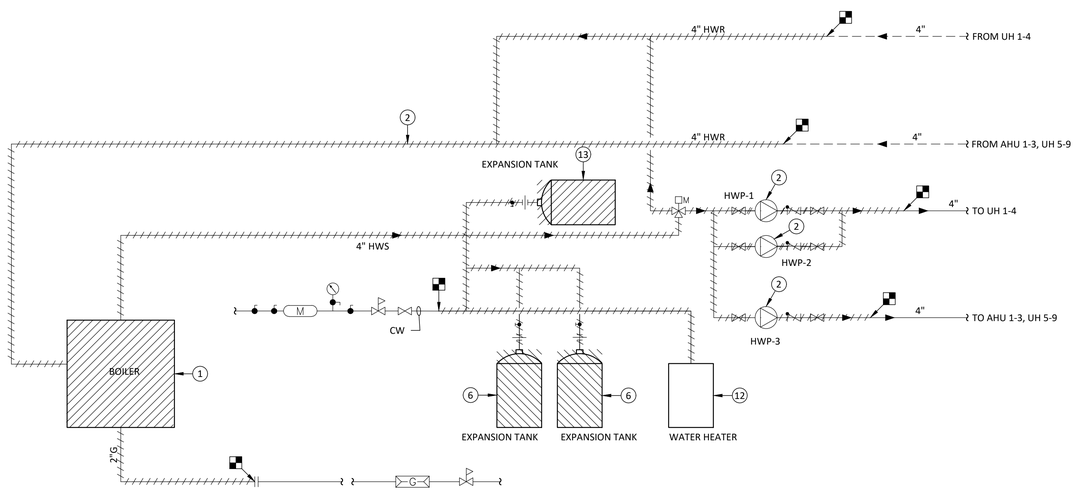

FLOW DIAGRAM | Scale: NTS | Drawing: **M104** | Detail: **02**

PARTIAL SYMBOLS & ABBREVIATIONS

Identifier	Description
	Disconnect From Existing
	Existing Equipment
	Demo Equipment
	Existing Piping To Remain
	Existing Piping To Be Removed
	Pipe Riser
	Pipe Drop On Direction Of Flow
	Capped Pipe
	Ball Valve

Identifier	Description
CW	Cold Water
ET	Expansion Tank
EX	Existing
HWR	Hot Water Return
HWS	Hot Water Supply
NIC	Not In Contract
	Floor Drain

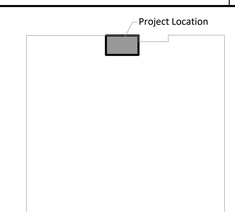

KEY PLAN

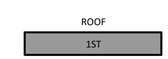

VERTICAL PLAN

REV.	DATE	ISSUE DESCRIPTION	ITEM	DATE	ISSUE DESCRIPTION
A	6/23/23	ISSUE FOR BID AND DCA REVIEW			

24x36

dlbassociates consulting engineers
3600 Route 66, Suite 150 - #5981
Neptune NJ 07753
Questions For DLB Call: Dan Rehberg
DLB Project ID: 12636 Phone: 732-318-0314

project: NJDWSC WANAQUE SOUTH HVAC & LIGHTING REPLACEMENT 310 FAIRFIELD ROAD WAYNE, NJ 07470

title: MECHANICAL DEMOLITION PARTIAL PLANS

scale	drawn by	checked by	date	filename
AS SHOWN	CAD	DR	06/09/2023	12636M104

dwg. no. M104

This Drawing Is The Property Of DLB Associates Consulting Engineers, PC. It Was Prepared Exclusively For This Particular Project And Is Limited To This Project Only. Unauthorized Reproduction Or Other Use Of These Drawings Or Ideas Is Prohibited.

Confidential and Proprietary / ©DLB Associates 2023

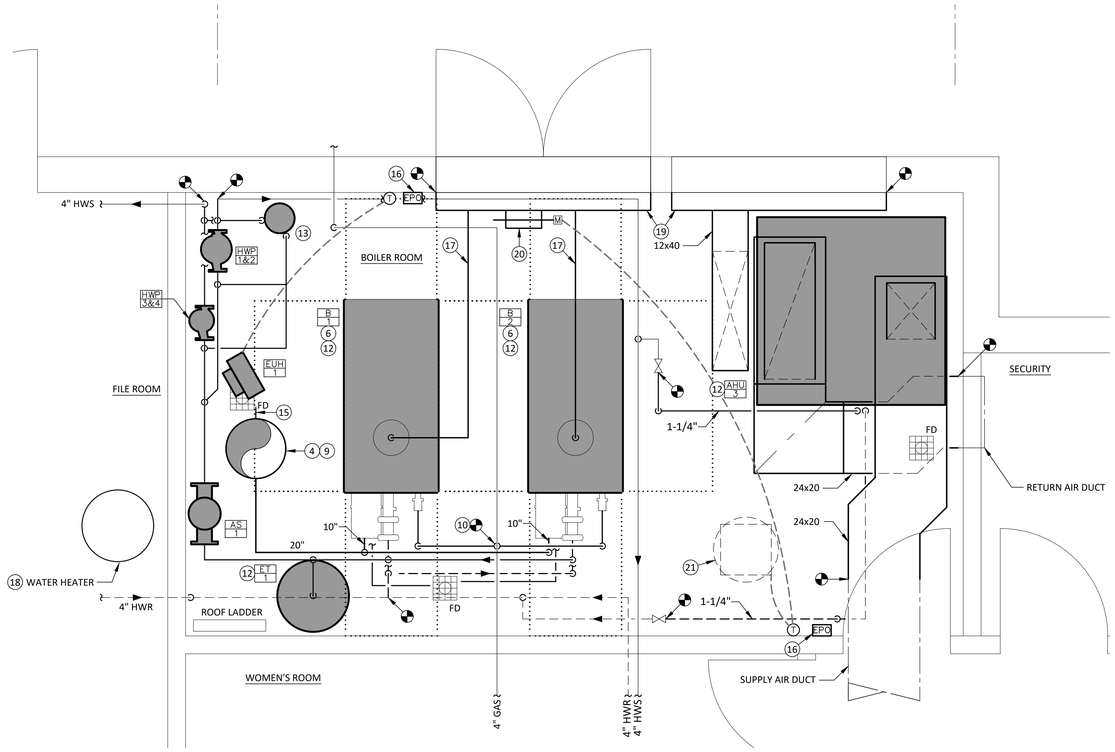

MECHANICAL ROOM PART PLAN | Scale: 1/2"=1'-0" | Drawing: **M105** | Detail: **01**

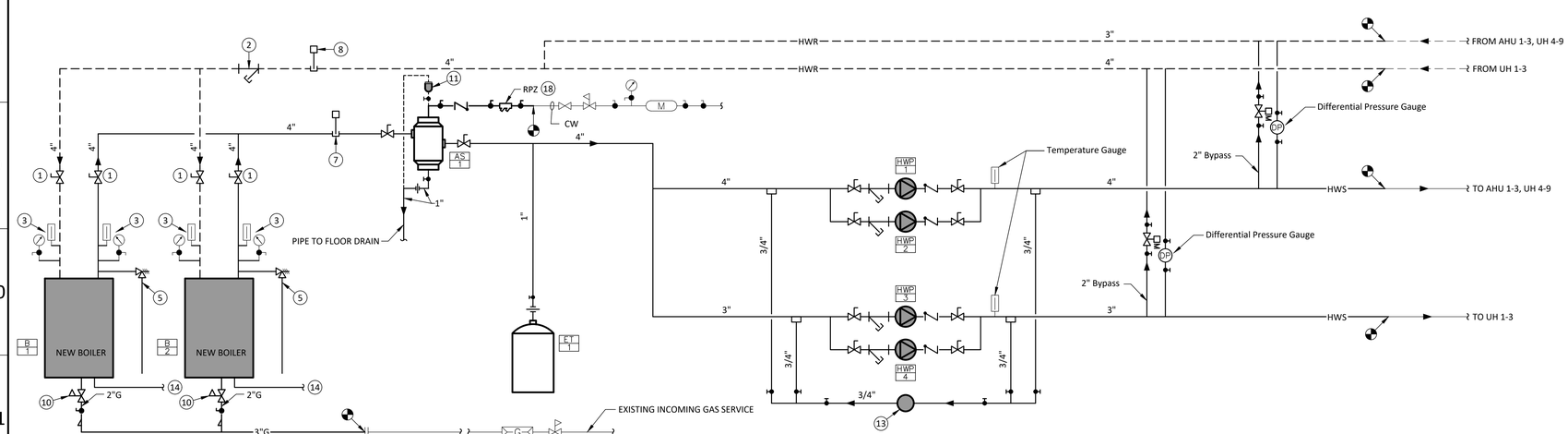

FLOW DIAGRAM | Scale: NTS | Drawing: **M105** | Detail: **02**

KEY NOTES (SYMBOLS 1, 2, ETC.)

1. Provide Line Size Lug Type Butterfly Isolation Valve. Valve Shall Be Installed So That The Valve Is Parallel To The Fluid Flow And As Close To The Main As Possible. All Manual Operators Higher Than 7'-0" AFF Shall Be Equipped With Chain Wheels And Chains.
2. Provide Line Size Wye Strainer With Blow-Off Valve, Hose Bib Connection, And Cap.
3. Provide Thermometer And Pressure Gage With Pet Cock.
4. Install New Breeching. Insert New Breeching Through Existing Opening To Roof And Seal Roof Opening Perimeter Airtight.
5. Provide Pressure Relief Valve Sized In Accordance With Manufacturers Recommendations And Rated At 60PSI. Route Relief Valve Drain To 6" AFF. In A Manner To Not Create A Tripping Hazard, Drain Line Should Be Installed Immediately Adjacent To Boiler Equipment Pad Where Possible.
6. Provide New Boiler Mounted Control Panel. Connect Hot Water Supply Temperature Transmitter, Boiler, Pumps, And Outside Air Temperature Transmitter.
7. Locate Hot Water Supply Temperature Transmitter (0-250F Range With 4-20mA Communication) 2 To 10 Pipe Diameters After The Last Boiler Supply Piping Fitting.
8. Locate Hot Water Return Temperature Transmitter (0-250F Range With 4-20mA Communication) 2 to 10 Pipe Diameters After The Return Header Piping Tap. Connect To Boiler Control Panel.
9. New 20" Inner Diameter, Double Wall, Stainless Steel, Category IV, AL294C Breeching. Refer To Specification. The Breeching Shall Pitch Down Toward The Boiler Room At A Minimum Of 1/4" Per Foot. Provide Manufacturer's Engineered Supports To Support Breeching. No Breeching Weight Shall Rest On Boiler Connection. Provide Damper With Low-Voltage Actuator And Draft Controller At Boiler To Maintain Negative Pressure In Stack. Contractor To Provide To-Scale Drawings To Breeching Manufacturer Who Shall Calculate Required Sizing. Contractor Is Responsible For Providing And Installing Required Size. Provide Temperature Gauge On Flue. Provide 1" Breeching Condensate Drain With Neutralizing Kit And Terminate At Floor Drain. Coordinate Placement With Owner In Field.
10. New Gas Regulator, Associated Shut-Off Valve And Vent Piping. Individually Pipe Gas Vents To Exterior. Terminate Minimum 10'-0" Above Path Of Egress. See Plumbing Plans For Additional Information.
11. High Capacity Automatic Air Vent.
12. Provide New 24" High Concrete Pad A Minimum Of 4" Around The Perimeter Of New Equipment. See Structural Plan For Additional Information.
13. Vector Industries Chemical Pot Feeder Model EC-5TC, Capacity 5 Gallons, 300 PSI With Filter.
14. Provide Factory Condensate Drain Kit With Neutralization Fill, Route Drain Piping To Nearest Floor Drain, And Terminate With Air Gap.
15. Provide Drain At Bottom Of New Stack. Connect To 1" Drain Piping And Provide With Neutralizing Kit.
16. Boiler Emergency Power Off Switch. Refer To Electrical Drawings For Additional Information.
17. New 12" Combustion Air Intake Directly Piped To Boiler From Existing Outside Air Louver.
18. See Plumbing Plans For Information On Water Heater And RPZ Installations.
19. Provide New 72" Wide x 42" High Insulated Plenum Behind Existing Louver. Connect New Ductwork To Plenum And Blank Off Unused Portions Of Louver.
20. Provide 12"x12" Intake Duct With Motorized Damper. See Controls Plans For Additional Information.
21. Exhaust Fan On Roof. See Plan M103 And Details For Additional Information.

DCA REVIEW

PARTIAL SYMBOLS & ABBREVIATIONS

Identifier	Description
	Connect To Existing
	Existing Equipment
	New Equipment
HWS / HWR	Heating Water Supply / Return
	Shutoff Valve
2	Two-Way Valve
	Globe Valve
	Balancing Valve

Identifier	Description
CW	Cold Water
NIC	Not In Contract
RPZ	Reduced Pressure Zone Assembly
	Capped Pipe
	Ball Valve
	Pipe Drop On Direction Of Flow
	Floor Drain

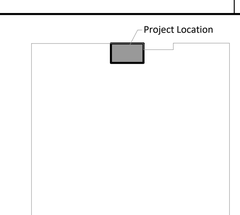

KEY PLAN

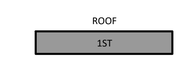

VERTICAL PLAN

REV.	DATE	ISSUE DESCRIPTION	ITEM	DATE	ISSUE DESCRIPTION
A	6/23/23	ISSUE FOR BID AND DCA REVIEW			

24x36

dlbassociates consulting engineers
3600 Route 66, Suite 150 - #5981
Neptune NJ 07753
Questions For DLB Call: Dan Rehberg
DLB Project ID: 12636 Phone: 732-318-0314

project: NJDWSC WANAQUE SOUTH HVAC & LIGHTING REPLACEMENT 310 FAIRFIELD ROAD WAYNE, NJ 07470

title: BOILER ROOM NEW WORK PLANS

scale	drawn by	checked by	date	filename
AS SHOWN	CAD	DR	06/09/2023	12636M105

dwg. no. M105

This Drawing Is The Property Of DLB Associates Consulting Engineers, PC. It Was Prepared Exclusively For This Particular Project And Is Limited To This Project Only. Unauthorized Reproduction Or Other Use Of These Drawings Or Ideas Is Prohibited.

Confidential and Proprietary / ©DLB Associates 2023

Rectangular Duct Hanger Schedule (Minimum Sizes)								
Half Duct Perimeter Range	Pair At 10' Spacing		Pair At 8' Spacing		Pair At 5' Spacing		Pair At 4' Spacing	
	Strap	Wire / Rod	Strap	Wire / Rod	Strap	Wire / Rod	Strap	Wire / Rod
P/2 < 30"	1" x 22 GA.	10 GA.	1" x 22 GA.	10 GA.	1" x 22 GA.	12 GA.	1" x 22 GA.	12 GA.
P/2 < 72"	1" x 18 GA.	3/8"	1" x 20 GA.	1/4"	1" x 22 GA.	1/4"	1" x 22 GA.	1/4"
P/2 < 96"	1" x 16 GA.	3/8"	1" x 18 GA.	3/8"	1" x 20 GA.	3/8"	1" x 22 GA.	1/4"
P/2 < 120"	1-1/2" x 16 GA.	1/2"	1" x 16 GA.	3/8"	1" x 18 GA.	3/8"	1" x 20 GA.	1/4"
P/2 < 168"	1-1/2" x 16 GA.	1/2"	1" x 16 GA.	1/2"	1" x 16 GA.	3/8"	1" x 18 GA.	3/8"
P/2 < 192"	-	1/2"	1-1/2" x 16 GA.	1/2"	1" x 16 GA.	3/8"	1" x 16 GA.	3/8"

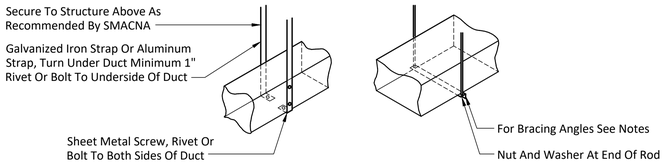

DUCT STRAP HANGER DETAIL | Scale: NTS | Drawing: M201 | Detail: 01

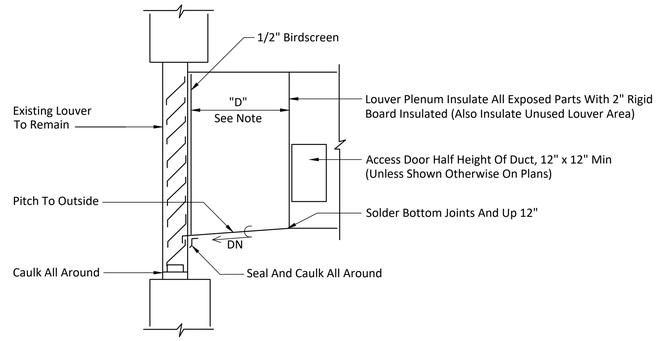

LOUVER CONNECTION DETAIL | Scale: NTS | Drawing: M201 | Detail: 02

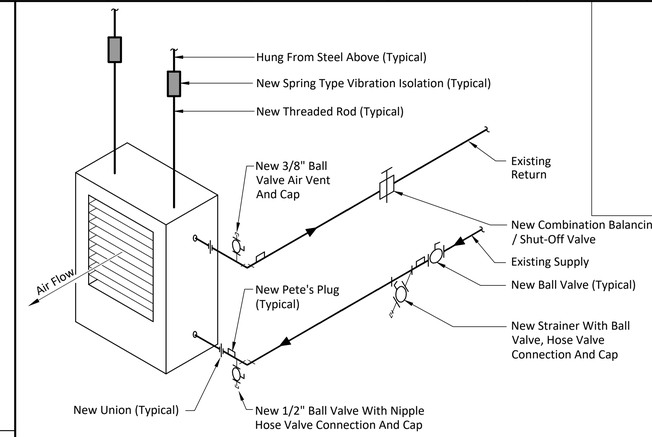

DCA REVIEW

NOTES:
1. Supply And Return Connections To Have Three Changes In Direction Between Header And Mains To Provide Flexibility.

HOT WATER UNIT HEATER DETAIL | Scale: NTS | Drawing: M201 | Detail: 03

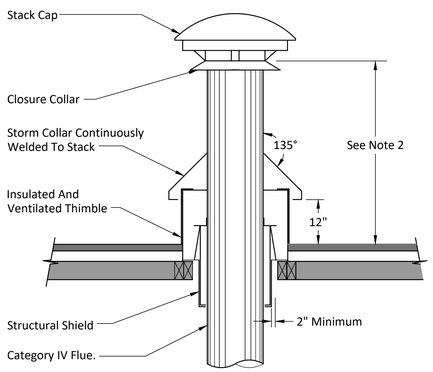

NOTES:
1. All Minimum Metal Gauges To Meet Requirements Of Local Code Or AHJ.
2. Flue Height Minimum 8'-0" Above Roof Or As Required By Local Codes. Provide Guy Wires Attached To Roof.
3. Contractor Shall Be Responsible To Remove Existing Roofing Where New Penetrations Through The Roof Occur. Contractor Shall Be Responsible To Cut New Roof Openings For New Flue. Provide New Roof Flashing And Counter Flashing. The Contractor Shall Hire The Services Of The Roofing Contractor Responsible For The Existing Roof Warranty And Guarantees, To Install All Penetrations So Not To Void Roof Warranty And Guarantees. Coordinate The Above With The Owner And The Engineer.

FLUE THROUGH ROOF DETAIL | Scale: NTS | Drawing: M201 | Detail: 04

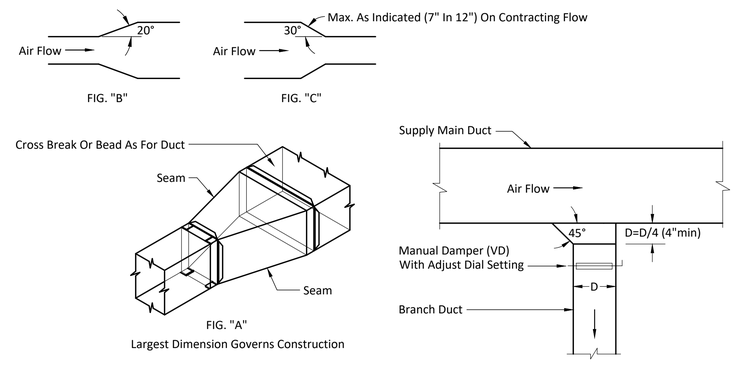

NOTES:
1. Duct Transitions Typical After Each Take-Off(s) Where Change In Duct Size Is Indicated.

DUCT TRANSITION DETAILS | Scale: NTS | Drawing: M201 | Detail: 05

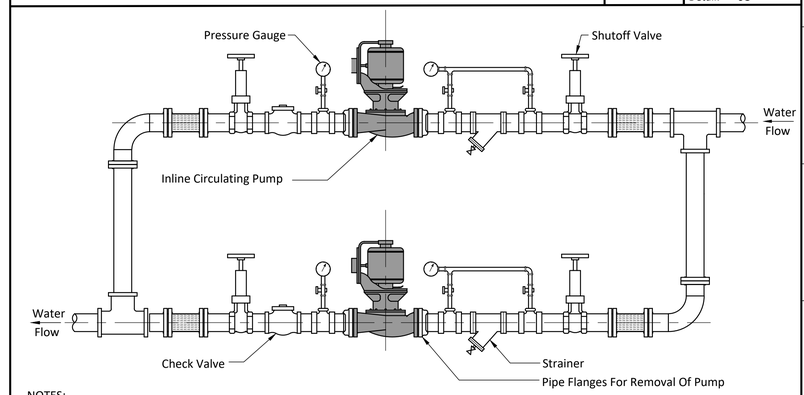

NOTES:
1. Shut-Off Cock Gauge To Be Left Shut Off Except When Actually Checking System Pressure.
2. Provide Reducers / Increasers As Required.

INLINE PUMP AND PIPING DETAIL | Scale: NTS | Drawing: M201 | Detail: 06

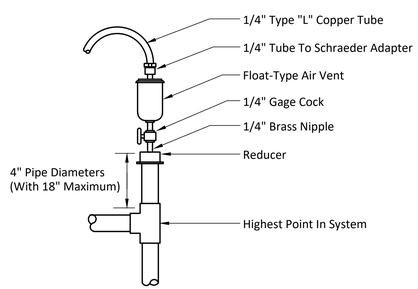

NOTES:
1. Use TFE Tape On All Threaded Joints.

AUTOMATIC AIR VENT ASSEMBLY | Scale: NTS | Drawing: M201 | Detail: 07

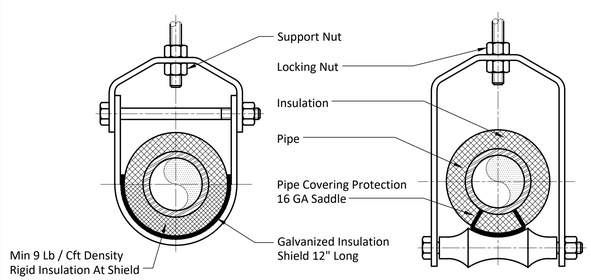

HEAVY DUTY CLEVIS HANGER
(For 1/2" Up To & Including 3" Pipe)

ADJUSTABLE HANGER WITH ROLLER
(For 4" To 6" Pipe)

NOTES:
1. Threaded Rod Size Determined By Supported Weight. See Specifications For Hanger Sizes And Spacing.

PIPE HANGER SUPPORT | Scale: NTS | Drawing: M201 | Detail: 08

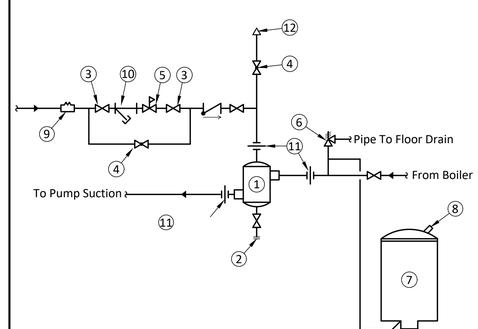

KEY NOTES FOR DETAIL (SYMBOLS 1, 2, ETC.)

1. Air Separator
2. Blowdown With Hose End
3. Shut-Off Valve
4. Ball Valve - Normally Closed
5. Pressure Reducing Valve
6. Pressure Relief Valve
7. Expansion Tank
8. Air Charger
9. Backflow Preventer
10. Wye Strainer With Blowdown
11. Union
12. Automatic Air Vent
13. Metal Seated Check Valve
14. Standard Check Valve

EXPANSION TANK AND AIR SEPARATION DETAIL | Scale: NTS | Drawing: M201 | Detail: 09

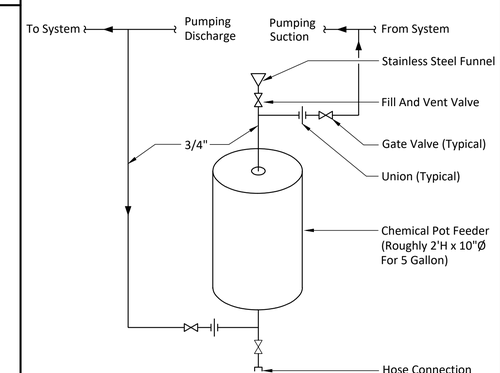

NOTES:
1. Pot Feeder Shall Be Econo Series Model EC-5 With Filter By Vector Industries.

CHEMICAL POT FEEDER DETAIL | Scale: NTS | Drawing: M201 | Detail: 10

REV.	DATE	ISSUE DESCRIPTION	ITEM	DATE	ISSUE DESCRIPTION
A	6/23/23	ISSUE FOR BID AND DCA REVIEW			

24x36

dlbassociates consulting engineers
3600 Route 66, Suite 150 - #5981
Neptune NJ 07753
Questions For DLB Call: Dan Rehberg
DLB Project ID: 12636 Phone: 732-318-0314

project: NJDWSC WANAQUE SOUTH HVAC & LIGHTING REPLACEMENT 310 FAIRFIELD ROAD WAYNE, NJ 07470

title: DETAILS - 1

scale	drawn by	checked by	date	filename
AS SHOWN	CAD	DR	06/09/2023	12636M201

dwg. no. M201

This Drawing Is The Property Of DLB Associates Consulting Engineers, PC. It Was Prepared Exclusively For This Particular Project And Is Limited To This Project Only. Unauthorized Reproduction Or Other Use Of These Drawings Or Ideas Is Prohibited.

Confidential and Proprietary / ©DLB Associates 2023

ROOM VENTILATION SCHEDULE

UNIT ID	ROOM NAME	RP (OA CFM / PERSON)	PZ (PEOPLE QTY.)	RA (OA CFM / SQFT)	AZ (AREA) (SQFT)	VBZ (CFM)	EZ	VOZ (CFM)	VPZ (MIN CFM)	ZP	NOTES
AHU-1&2	Pump Room	0	0	0.06	9,000	540	0.8	675	20,400		
	SUMMARY									VOZ = VOT =	675 CFM
										DESIGN OA =	1,000 CFM
AHU-3	Conference Room	5	6	0.06	637	68	0.8	85	1,500	0.06	
	Board Room	5	4	0.06	165	30	0.8	37	540	0.07	
	Pantry	5	1	0.06	64	9	0.8	11	170	0.07	
	Lobby	5	1	0.06	357	26	0.8	33	530	0.06	
	Security	5	1	0.06	79	10	0.8	12	160	0.08	
	Control Room	5	1	0.06	474	33	0.8	42	680	0.06	
							0.8				
	SUMMARY	PZ = 14		EV = 1.00	PS = 4	D = 0.29		ZP = 0.08	VOU = 127	VOT =	127 CFM
										DESIGN OA =	400 CFM

NOTES:
1. From 2021 International Mechanical Code & ASHRAE 62.1-2022, Section 403.

LEGEND:
- RP = People Outdoor Air Rate: Outdoor Airflow Rate Required Per Person
- PZ = Zone Population: Number Of People In The Space Or Spaces In The Zone
- RA = Area Outdoor Air Rate: Outdoor Airflow Rate Required Per Unit Area
- AZ = Zone Floor Area: Net Occupiable Floor Area Of The Space Or Spaces In The Zone
- VBZ = Breathing Zone Outdoor Airflow = [Rp X Pz] + [Ra X Az]
- EZ = Zone Air Distribution Effectiveness: From Table
- VOZ = Zone Outdoor Airflow Rate = Vbz / Ez
- VPZ = Primary Airflow: Lowest Expected Primary Airflow To The Zone When Fully Occupied
- ZP = Primary Outdoor Air Fraction = Voz / Vpz
- EV = System Ventilation Effectivenes
- PS = System Population: Total Number Of Occupants In The Area Served By System
- D = Occupant Diversity = Ps / Σpz
- VOU = Uncorrected Outdoor Air = [D X Σ[Rp X Pz]] + Σ[Ra X Az]
- VOT = Corrected Outdoor Air = Vou / Ev
- OA = Outdoor Air

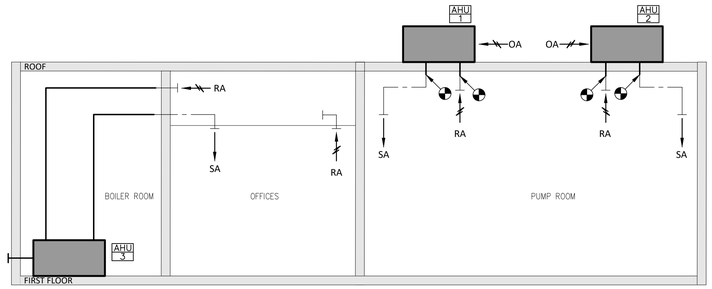

AIRFLOW RISER DIAGRAM | Scale: NTS | Drawing: M202 | Detail: 01

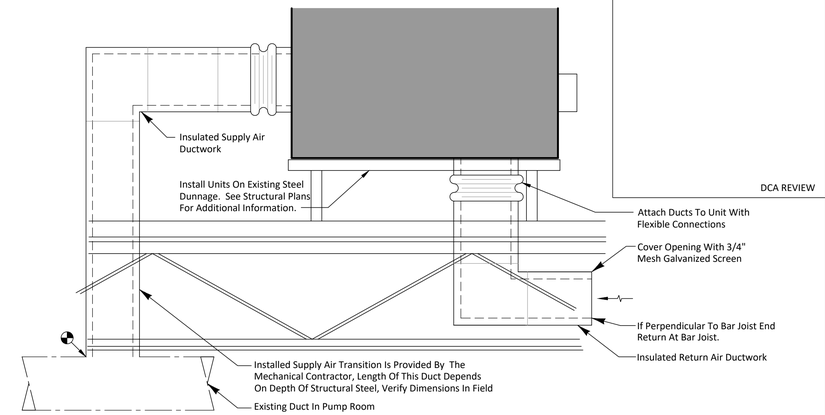

ROOFTOP AIR HANDLER INSTALLATION | Scale: NTS | Drawing: M202 | Detail: 02

NOTES:
1. Freeze Protection Pump Shall Run When The Outside Air Temperature Is Below 45F Or The Low-Limit Switch Has Been Tripped.

HOT WATER COIL PIPING CONNECTIONS | Scale: NTS | Drawing: M202 | Detail: 04

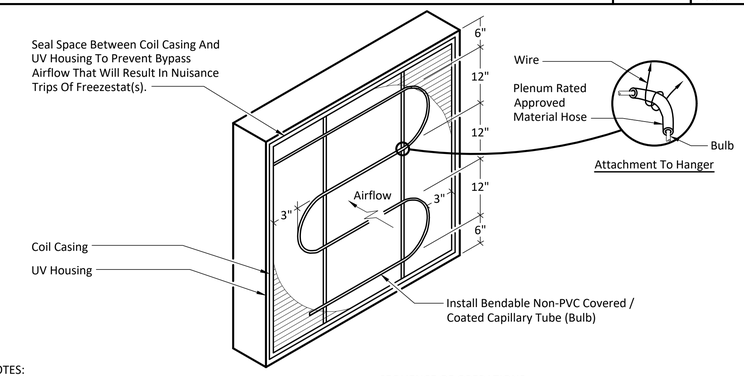

NOTES:
1. Install Freezestat Capillary Tube(s) On Upstream Face Of Each Coil. Provide Complete Coverage Such That Capillary Tube(s) Are Within 6" Of Every Point On Coil Face.
2. Provide Multiple Freezestats As Required For Complete Coverage.
3. Pitch Capillary Tube(s) Continually Downward Without Sagging. Refer To Manufacturer Documentation For Specific Requirements.

SEQUENCE OF OPERATIONS:
1. Upon Activation Of The Freezestat, The Following Shall Occur:
   - A. Air Handler (AHU) Fan Blower Motor Shall Stop
   - B. Associated DX Compressor Shall Lock Out
   - C. Outside Air Damper Shall Close Fully
   - D. Return Air Damper Shall Open Fully
   - E. Hot Water Control Valve Shall Open Fully
   - F. AHU Shall Display Alarm

FREEZESTAT COIL INSTALLATION DETAIL | Scale: NTS | Drawing: M202 | Detail: 05

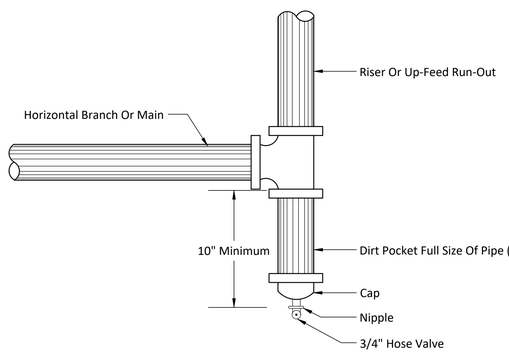

NOTES:
1. Pipe Is Welded Or Screwed As Required Per Specification.

DRAIN VALVE ARRANGEMENT AT BOTTOM OF RISERS | Scale: NTS | Drawing: M202 | Detail: 03

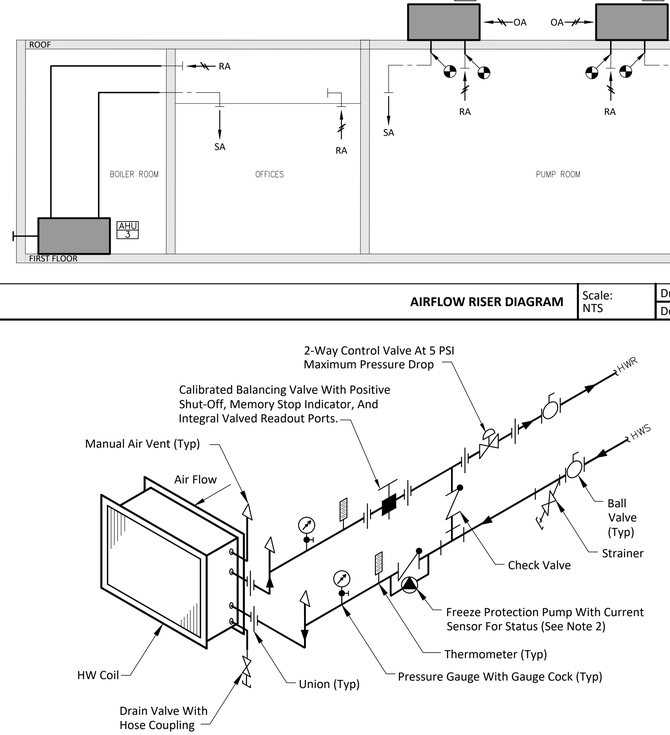

NOTES:
1. Mechanical Contractor Shall Be Responsible To Remove Existing Roofing Where New Equipment Curbs Are To Be Set And Where New Duct Penetrations Through The Roof Occur. Mechanical Contractor Shall Be Responsible To Cut New Roof Openings For New Ductwork, Piping, Etc. After Setting Of The Equipment Curbs, Provide New Roof Flashing And Counter Flashing. The Mechanical Contractor Shall Hire The Services Of The Roofing Contractor Responsible For The Existing Roof Warranty And Guarantees, To Install All Curbs So Not To Void Roof Warranty And Guarantees. Coordinate The Above With The Owner .

ROOF MOUNTED EXHAUST FAN | Scale: NTS | Drawing: M202 | Detail: 07

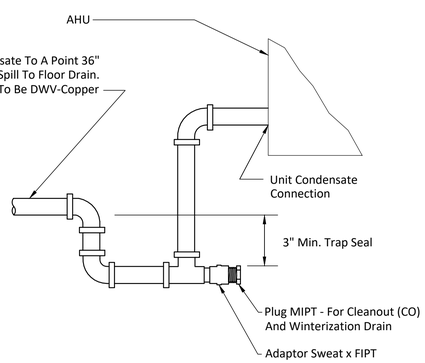

NOTES:
1. Trap Depth Must Exceed Static Pressure Of Fan. Check With Manufacturer Prior To Installing Trap.

CONDENSATE DRAIN CONNECTION | Scale: NTS | Drawing: M202 | Detail: 06

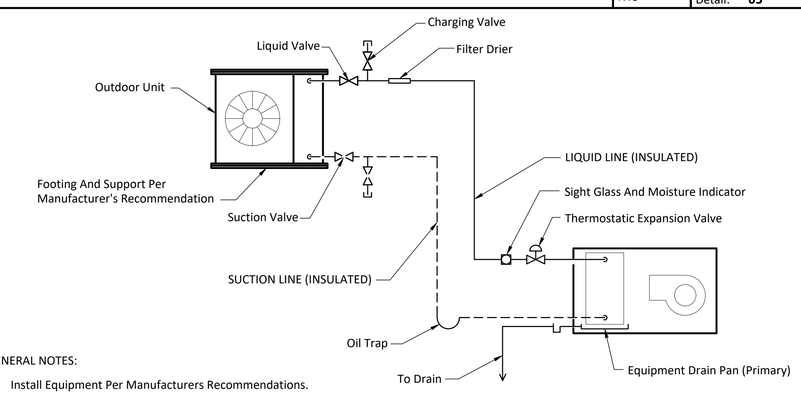

GENERAL NOTES:
1. Install Equipment Per Manufacturers Recommendations.
2. Provide Necessary Valves And Fittings To Accomodate These Requirements.
3. Slope Refrigerant Piping As Required By The Manufacturers Recommendations.
4. Coordinate Quantity, Size, And Routing Of Refrigerant Piping With Manufacturer.

SPLIT SYSTEM REFRIGERANT PIPING SCHEMATIC | Scale: NTS | Drawing: M202 | Detail: 08

REV.	DATE	ISSUE DESCRIPTION	ITEM	DATE	ISSUE DESCRIPTION
C	7/27/23	HW UH MODEL NUMBERS & FAN DAMPER			
A	6/23/23	ISSUE FOR BID AND DCA REVIEW			

24x36

dlbassociates consulting engineers
3600 Route 66, Suite 150 - #5981
Neptune NJ 07753
Questions For DLB Call: Dan Rehberg
DLB Project ID: 12636 Phone: 732-318-0314

project: NJDWSC WANAQUE SOUTH HVAC & LIGHTING REPLACEMENT 310 FAIRFIELD ROAD WAYNE, NJ 07470

title: DETAILS - 2

scale	drawn by	checked by	date	filename
AS SHOWN	CAD	DR	06/09/2023	12636M202

dwg. no. M202

This Drawing Is The Property Of DLB Associates Consulting Engineers, PC. It Was Prepared Exclusively For This Particular Project And Is Limited To This Project Only. Unauthorized Reproduction Or Other Use Of These Drawings Or Ideas Is Prohibited.

Confidential and Proprietary / ©DLB Associates 2023

ROOFTOP AIR HANDLER SCHEDULE - PUMP ROOM

UNIT ID	MODEL	AREA SERVED	SUPPLY FAN					HEATING COIL						FILTERS			ELECTRICAL			SOUND	WEIGHT	NOTES
			SUPPLY AIR (CFM)	OUTSIDE AIR (CFM)	ESP (IN WG)	TSP (IN WG)	MOTOR (HP)	CAPACITY (MBH)	EAT (DB °F)	LAT (DB °F)	APD (IN WG)	HW FLOW (GPM)	WPD (FT WG)	TYPE	QTY / SIZE (IN)	APD (IN WG)	VOLTAGE (V)	MCA (A)	MOCP (A)	(dBA)	(LB)	
AHU-1	CSAA035	Pump Room	20,400	2,040	1	2.8	(4) at 6HP	500.0	63	85.6	0.2	50.0	0.1	MERV 8	(16) 20x25	0.62	460	26.1	30	90	4,000	ALL
AHU-2	CSAA035	Pump Room	20,400	2,040	1	2.8	(4) at 6HP	500.0	63	85.6	0.2	50.0	0.1	MERV 8	(16) 20x25	0.62	460	26.1	30	90	4,000	ALL

NOTES:
1. Selection Is Based On Package Rooftop Air Handling Unit With Hot Water Heating By Trane.
2. Unit Controls With Graphic Touchscreen To Be Provided By Equipment Manufacturer. Include Labor To Field Modify Controls.
3. Provide Variable Frequency Drive On Supply Fans.
4. Static Pressure Indicated Above Is The External Static Pressure Which Excludes Any P.D. Within The Unit.
5. Units Shall Be Of Double Wall Construction. Units Shall Be Complete With Side Outlet Drain, Access Doors And Lights, And Economizer With Power Exhaust.
6. Maximum Air Velocity Thru Heating Coil Shall Not Exceed 500 Feet Per Min.
7. Provide 4 Sided Factory Equipment Rail Suitable For Seismic Conditions And Installation On Existing Steel Dunnage.
8. Electrical Connection To Be Single Point And To Be Through The Bottom Of The Unit. Provide Fused Disconnect Switch And 115 Volt GFI Convenience Receptacle.
9. Unit Shall Have Hinged Access Doors.
10. Coil Shall Be Coated With A Phenolic Coating.
11. Units Shall Have Full UL Listing.
12. Motor Efficiency Shall Match Premium Efficiency Table.
13. Provide Duct Smoke Detectors In Supply And Return.
14. Provide Phase And Brownout Protection.

HOT WATER UNIT HEATER SCHEDULE

UNIT ID	MODEL NO.	TYPE	LOCATION	CAPACITY (MBH)	EWT (°F)	LWT (°F)	WATER FLOW (GPM)	AIR FLOW (CFM)	EAT DB (°F)	LAT DB (°F)	MOTOR POWER (HP)	MOTOR VOLTAGE (V)	MOTOR PHASE (Ø)	MOTOR FREQ (HZ)	WEIGHT (LBS)	ACCESSORIES	NOTES
UH-1	VS-367	VERTICAL	CHLORINE ROOM	240	180	160	20.8	3,520	60	96	3/4	480	3	60	150	ALL	ALL
UH-2	VS-237	VERTICAL	CHLORINE ROOM	149	180	160	15.4	4,160	60	94	1/4	115	1	60	135	ALL	ALL
UH-3	VS-367	VERTICAL	CHLORINE ROOM	240	180	160	20.8	3,520	60	96	3/4	480	3	60	150	ALL	ALL
UH-4	HS-48	HORIZONTAL	FILE ROOM	27	180	160	2.7	630	60	99	1/20	115	1	60	50	ALL	ALL
UH-5	HS-18	HORIZONTAL	GENERATOR ROOM	12	180	160	1	400	60	85	16W	115	1	60	25	ALL	ALL
UH-6	HS-48	HORIZONTAL	SHOP	27	180	160	2.7	630	60	99	1/20	115	1	60	50	ALL	ALL
UH-7	HS-204	HORIZONTAL	SCREEN ROOM	124	180	160	12.7	2,900	60	100	1/3	115	1	60	100	ALL	ALL
UH-8	HS-204	HORIZONTAL	SCREEN ROOM	124	180	160	12.7	2,900	60	100	1/3	115	1	60	100	ALL	ALL
UH-9	HS-204	HORIZONTAL	SCREEN ROOM	124	180	160	12.7	2,900	60	100	1/3	115	1	60	100	ALL	ALL

NOTES:
1. Selection Based On Equipment Manufactured By Sterling.
2. Coils Shall Be Constructed Of 0.008" Thick Aluminum Fins Mechanically Bonded To 5/8" OD Expanded Copper Tubes.
3. Cabinets Shall Be Constructed Of Minimum 18 Gauge Steel. Finish And Color Shall Be Manufacturer Standard.
4. Provide Fused Disconnect.
5. Units Shall Have Built-In Thermal Overload Protection. Provide External Motor Starter On 480V Units. C

ACCESSORIES:
1. Remote Thermostat
2. Ceiling Mounting Bracket

AIR HANDLING UNIT SCHEDULE - OFFICES

UNIT ID	MODEL NO.	AREA SERVED	SUPPLY FAN				HOT WATER HEAT SECTION							DX COOLING COIL				ELECTRICAL			WEIGHT	NOTES
			SUPPLY AIR (CFM)	OUTSIDE AIR (CFM)	ESP (IN WG)	MOTOR (HP)	CAPACITY (MBH)	FLOW (GPM)	EWT (°F)	LWT (°F)	APD (IN. WG)	WPD (FT. H2O)	ROWS	TOTAL (MBH)	SENS (MBH)	EAT (DB / WB °F)	LAT (DB / WB °F)	VOLTAGE (V)	MCA (A)	MOCP (A)	(LB)	
AHU-3	UCCAD10	Offices	4,000	400	1.0	5.0	108.0	10.8	180.0	160.0	0.1	0.4	1.0	125.0	97.8	80 / 67	57.4 / 57.2	460V / 3ϕ	7.0	15.0	1,100	ALL

NOTES:
1. Selection Is Based On Package Indoor Air Handling Unit With Hot Water Heating And DX Cooling By Trane.
2. Supply Fan Shall Be Variable Volume. Motor Shall Be Premium Efficiency Type. Controls Shall Adjust Fan Speed Based On Static Pressure In Ductwork Main.
3. Static Pressure Indicated Above Is The External Static Pressure Which Excludes Any P.D. Within The Unit.
4. Unit Shall Be Supported On 4" Tall Base Rail.
5. Unit Controls With Graphic Touchscreen To Be Provided By Equipment Manufacturer. Include Labor To Field Modify Controls.
6. Provide Unit With 2" Pleated MERV 13 Filters.
7. Provide 100% Comparative Enthalpy Low Leakage Economizer With Barometric Relief And Comparative Enthalpy Sensors.
8. Provide Duct Smoke Detector In Return.

EXHAUST FAN SCHEDULE

UNIT ID	MODEL NO. B	TYPE	LOCATION	SERVICE	AIRFLOW (CFM)	S.P. (IN WG)	SPEED (RPM)	MOTOR HORSEPOWER (HP)	MOTOR VOLTAGE / PHASE (V)	MOTOR DRIVE	INTERLOCK	WEIGHT (LB)	NOTES	ACCESSORIES
EF-4, 5	G-240-VG	Centrifugal	Roof	VFD Room Exhaust	9,000	0.25	750	5	480 / 3ϕ	Direct	Thermostat	175	ALL	ALL
EF-6,7,8	G-240-VG	Centrifugal	Roof	Pump Room Exhaust	6,600	0.25 B	750	2	480 / 3ϕ	Direct	Thermostat	150	ALL	ALL
EF-9	G-160-VG	Centrifugal	Roof	PV Electric Area Exhaust	3,000	0.25	1,000	1	120 / 1ϕ	Direct	Thermostat	75	ALL	ALL
EF-10	G-240-VG	Centrifugal	Roof	Screen Room Exhaust	9,500	0.25	1,000	5	480 / 3ϕ	Direct	Thermostat	175	ALL	ALL
EF-11	G-070-VG	Centrifugal	Roof	Repair Shop Exhaust	250	0.25	1,300	1/15	120 / 1ϕ	Direct	Thermostat	20	ALL	ALL
EF-12	G-080-VG	Centrifugal	Roof	Toilet Exhaust	350	0.25	1,500	1/10	120 / 1ϕ	Direct	Light Switch	20	ALL	ALL
EF-13	G-095-VG	Centrifugal	Roof	Boiler Room Exhaust	900	0.25	1,500	1/6	120 / 1ϕ	Direct	Thermostat	40	ALL	ALL

NOTES:
1. Selection Based On Equipment Manufactured By Greenheck.
2. Motors Shall Be Of Premium Efficiency.
3. Fans Shall Be Fully Modulating EC Type With 0-10 VDC Input.

ACCESSORIES:
1. Fused Disconnect Switch
2. Integral Speed Controller
3. Barometric Damper C
4. Remote Thermostat
5. 12" Roof Curb Adaptor With Damper Tray Base Shall Be Hinged. C

AIR SEPARATOR SCHEDULE

UNIT ID	MODEL NO.	SERVICE	TYPE	CAPACITY (GPM)	FITTING TYPE	WEIGHT (LBS)	NOTES
AS-1	R-4F	HOT WATER	TANGENTIAL	300	FLANGE	278	ALL

NOTES:
1. Selection Based On Rolairtrol Model Line Equipment Manufactured By Bell &Gossett.
2. Provide Unit With Integral Strainer.
3. Provide Unit With Optional Factory Welded Support Bracket.

DCA REVIEW

HOT WATER BOILER SCHEDULE

UNIT ID	MODEL NO.	RATING (BHP)	HEATING CAPACITY INPUT (MBH)	HEATING CAPACITY OUTPUT (MBH)	EWT (°F)	LWT (°F)	FLOW (GPM)	P.D. (IN W.G.)	FLUE DIAM (IN)	COMB. AIR DIAMETER (IN)	ELECTRICAL VOLTAGE (V)	ELECTRICAL PHASE (Ø)	ELECTRICAL MCA (A)	ELECTRICAL MOCP (A)	WEIGHT (LBS)	NOTES
B-1	PK Sonic SC-1500	42.2	1,500	1,456	180	160	145	8.3	10	12	208	1	10	20	1,500	ALL
B-2	PK Sonic SC-1500	42.2	1,500	1,456	180	160	145	8.3	10	12	208	1	10	20	1,500	ALL

NOTES:
1. Selection Based On Equipment Manufactured By Patterson Kelley, Which Shall Be Provided And Installed By Contractor.
2. Boilers Shall Fire Modules To Maintain The Constant Discharge Water Temperature Specified Above With Outdoor Air Reset Capability. Provide New Outdoor Air Temperature Sensor.
3. Provide Condensate Neutralizing Kit At Boiler.
4. Boiler Shall Be Sealed Combustion.
5. Provide Boiler Mounted Control Panel For Operation And Staging Of Boilers And Pumps.
6. Provide Natural Gas Regulator At Boiler. Regulator Shall Be Sized To Reduce Site Pressure (2PSI, Confirm In Field) To A Minimum Of 3.5" WC And Maximum 14" WC At Boiler.

AIR COOLED CONDENSING UNIT SCHEDULE - OFFICES

UNIT ID	MODEL NO.	ASSOCIATED AHU	AREA SERVED	SIZE (TONS)	ELECTRICAL VOLTAGE (V)	ELECTRICAL MCA (A)	ELECTRICAL MOCP (A)	IEER	WEIGHT (LB)	NOTES
CU-3	TTA12044CAA	AHU-3	Offices	10	460V / 3 ϕ	19	25.0	13	525	ALL

NOTES:
1. Selection Based On Equipment Manufactured By Trane.
2. Unit Performance Based On 95°F Ambient Air Temperature.
3. Unit Shall Have Two Scroll Compressors With Two Stage Capability (4 Total Stages).
4. Unit Shall Be Factory Assembled With Weatherproof Cabinets And Shall Be Complete With Fused Disconnect Switch.
5. Unit Shall Be UL Listed.
6. Refrigerant Shall Be R-410a.
7. Provide Support Rails Mounted To Grade.
8. Filter / Dryer Shipped Loose For Field Installation.

PUMP SCHEDULE

UNIT ID	MODEL NO.	SIZE	TYPE	SERVICE	FLOW (GPM)	TDH (FT. W.G.)	SPEED (RPM)	MOTOR POWER (HP)	MOTOR VOLTAGE (V)	MOTOR PHASE (Ø)	MOTOR FREQ (HZ)	WEIGHT (LBS)	NOTES
HWP-1,2	e-90	2AAC	INLINE	HOT WATER HEATING - ZONE 1 (AHU1-3, UH-5-9)	150	50	1,800	3	115	1	60	100	ALL
HWP-3,4	e-90	1.5AB	INLINE	HOT WATER HEATING - ZONE 2 (UH-1-4)	60	30	1,800	1	115	1	60	75	ALL
FZP-1,2	PL-100	2"	INLINE	HOT WATER CIRCULATOR - FREEZE PROTECTION	50	10	3,600	1/2	115	1	60	15	1-3
FZP-3	PL-36	1-1/4"	INLINE	HOT WATER CIRCULATOR - FREEZE PROTECTION	10.8	10	3,600	1/6	115	1	60	15	1-3

NOTES:
1. Selection Based On Equipment Manufactured By Bell&Gossett.
2. Pump Shall Be Furnished With A Premium Efficiency, Inverter Duty Motor.
3. Pumps Shall Be Bronze Fitted All Iron Construction.
4. Furnish And Install Variable Frequency Drives For Each Pump. Basis Of Design Is ABB Model ACH580.

ELECTRIC UNIT HEATER SCHEDULE

UNIT ID	MODEL NO.	TYPE	AIRFLOW (CFM)	ESP (IN WG)	CAPACITY (kW)	ELECTRICAL VOLTAGE (V)	ELECTRICAL MCA (A)	ELECTRICAL MOCP (A)	WEIGHT (LB)	ACCESSORIES	NOTES
EUH-1	HER30	Horizontal	380	0.25	3	480 / 3ϕ	4.8	15	30	1-3	1-5

NOTES:
1. Selection Based On Equipment Manufactured By Modine.
2. Cabinets Shall Be Constructed Of Minimum 14 Gauge Steel. Standard Factory Finish And Color.
3. Motors Shall Be Permanent Split Capacitor Type. Provide Fused Disconnect.
4. Configuration Shall Be Ceiling Mounted.
5. Units Shall Have Built-In Thermal Overload Protection.

ACCESSORIES:
1. Remote Thermostat
2. Factory Mounting Support Bracket.

EXPANSION TANK SCHEDULE

UNIT ID	MODEL NO.	SERVICE	TANK VOLUME (GAL)	ACCEPTANCE VOLUME (GAL)	TANK DIMENSIONS DIAMETER (IN)	TANK DIMENSIONS HEIGHT (IN)	WEIGHT (LBS)	NOTES
ET-1	B-500	HOT WATER SYSTEM	132.0	132	24	78	1450	ALL

NOTES:
1. Selection Based On Equipment Manufactured By Bell & Gossett.
2. Unit Shall Be Pre-Charged To 14 PSI.
3. Provide Seismic Restraints Option.
4. Expansion Tank Shall Be Bladder Type.

REV.	DATE	ISSUE DESCRIPTION	ITEM	DATE	ISSUE DESCRIPTION
C	7/27/23	HW UH MODEL NUMBERS & FAN DAMPERS			
B	7/13/23	CORRECTED FAN MODEL NUMBERS			
A	6/23/23	ISSUE FOR BID AND DCA REVIEW			

24x36

dlbassociates consulting engineers
3600 Route 66, Suite 150 - #5981
Neptune NJ 07753
Questions For DLB Call: Dan Rehberg
DLB Project ID: 12636 Phone: 732-318-0314

project: NJDWSC WANAQUE SOUTH HVAC & LIGHTING REPLACEMENT 310 FAIRFIELD ROAD WAYNE, NJ 07470

title: SCHEDULES

scale: AS SHOWN | drawn by: CAD | checked by: DR | date: 06/09/2023 | filename: 12636M203

dwg. no. M203

This Drawing Is The Property Of DLB Associates Consulting Engineers, PC. It Was Prepared Exclusively For This Particular Project And Is Limited To This Project Only. Unauthorized Reproduction Or Other Use Of These Drawings Or Ideas Is Prohibited.

Confidential and Proprietary / ©DLB Associates 2023

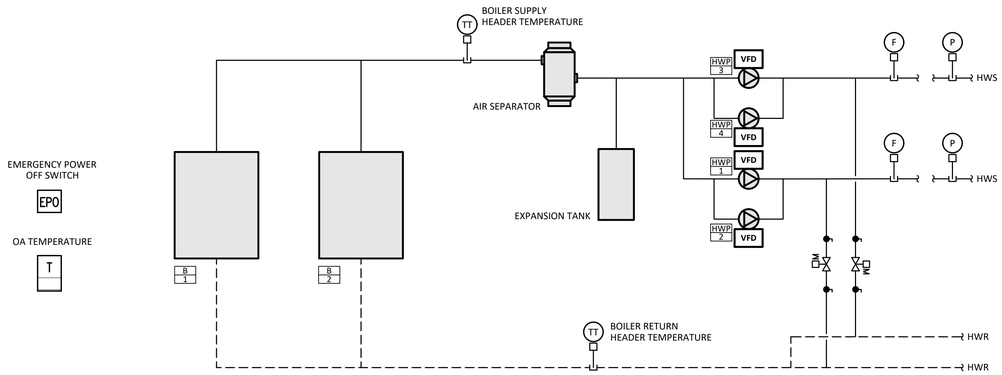

HEATING HOT WATER SYSTEM CONTROLS DIAGRAM | Scale: NTS | Drawing: **M500** | Detail: **01**

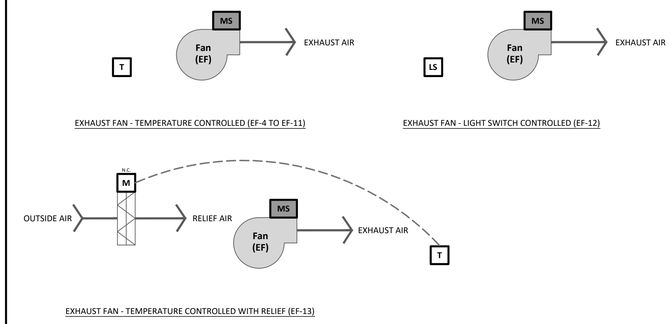

EXHAUST FAN CONTROLS DIAGRAM | Scale: NTS | Drawing: **M500** | Detail: **02**

DCA REVIEW

SEQUENCE OF OPERATION - BOILER

Hot Water Boilers

1. System Description
   A. Hot Water Boiler Plant

2. Equipment Referenced
   A. Hot Water Boilers (B)
   B. Pumps (P)

3. General:
   A. The Heating Hot Water Plant Consists Of Two (2) Gas Fired Hot Water Boilers, Four (4) Variable Volume Primary Heating Hot Water Pumps, Motorized Control Valves, Flow Meters, And Pressure / Temperature Instruments.
   B. The Heating Hot Water System Is Configured As A Variable Primary System.
   C. All Setpoints Shall Be Adjustable.
   D. A Boiler Mounted, Vendor Supplied Controller Shall Be Provided To Accomplish All Monitoring And Control As Outlined On The System Controls Drawing, Points List, And Sequence Of Operation.
   E. The Controller Shall Be Capable Of Connection To The Building Wide Controls Front End Through A BACnet MS/TP Network For Monitoring And Control At A Future Point.

4. Heating Loop Hot Water Pump Control:
   A. When The Heating Hot Water Plant Is Enabled (Outside Air Temperature Below 45 Deg F. Adjustable) The Primary Heating Loop Heating Hot Water Pumps Shall Be Commanded To Run.
   B. Pump Speed Shall Be Set Based On Maintaining Pressure Setpoint. Differential Pressure Sensors Shall Be Installed At A Point 2/3 Down The Piping Run. The Minimum Pump Speed Shall Be Set To Approximately 50 GPM.
   C. The Two-Way Modulating Valves In The Bypass Shall Modulate Open Based On The Total System Flow As Determined By The Hot Water Supply Flow Meter. Bypass Shall Be Used To Ensure Boiler Minimum Flow Is Always Met.
   D. The Heating Hot Water Plant Controller Shall Automatically Alternate The Primary And Secondary Assignment Of The Pumps To Equalize Run Time.
   E. If At Any Time The Status Of A Heating Loop Hot Water Pump Does Not Match The Command After A 30 Second Delay, The Pump Shall Be Disabled And An Alarm Shall Be Generated At The Unit Controller.

5. Boiler Plant Common Hot Water Supply Temperature Control:
   A. General:
      1) The Boiler Plant Shall Maintain The Heating Hot Water Common Supply Temperature At Setpoint (180F Adjustable).
      2) Boiler Will Be Enabled By The Unit Controller, After Run Proof Of Hot Water Pump / Flow And Shall Operate As Programmed To Maintain The Boiler Leaving Water Temperature At Setpoint.
   B. Boiler Sequencing:
      1) When The Plant Common Heating Hot Water Temperature Falls Below Setpoint, The Boiler Shall Be Enabled And The Boiler And Shall Operate Under Factory Installed Controls To Maintain Boiler Leaving Water Temperature At Setpoint. If Setpoint Is Not Met After 30 Minutes, Additional Boilers Shall Be Made Operational As Needed In Order To Meet Setpoint.
      2) When The Firing Rate Of The Boiler Reaches Minimum, The Boiler Shall Cycle To Maintain Its Leaving Water Temperature At Setpoint.
         a. Hot Water Supply Temperature Shall Be Based On An Outside Air Reset Schedule. The Outside Air Reset Schedule Programming Shall Be Integral To The Boiler Control Panel And Be Fully Adjustable. At An Outside Air Temperature Of 10°F, The Hot Water Supply Temperature Shall Be Maintained At 180°F. At An Outside Air Temperature Of 60°F, The Hot Water Supply Temperature Shall Be Maintained At 130°F. A Linear Relationship Shall Be Maintained Between These Two Points.
         b. When The Boiler Does Not Fire For A Minimum Of 30 Minutes, The Boiler Shall Be Disabled And The Pumps Run For An Additional Five Minutes And Then Turned Off.
   C. Alarms And Safeties:
      1) Boiler Failure: If At Any Time A Boiler Fails, Or Is Is Unable To Maintain Its Leaving Water Temperature At Setpoint For Five Minutes The Following Shall Occur.
         a. The Boiler Shall Be Disabled And An Alarm Shall Be Generated At The Unit Controller.
         b. The Lag Boiler Shall Be Enabled.
      2) Pump Failure: If At Any Time A Pump Fails, The Boiler Shall Be Disabled And An Alarm Shall Be Generated At The Unit Controller.
         a. The Lag Pump Shall Be Enabled.
      3) Emergency Shutdown: If The EPO Switches Are Activated, The Boilers And Pumps Shall Be Shutdown And The Gas Solenoid Valves Shall Close.
   D. Outside Air Reset:
      1) The Boiler Supply Water Setpoint Shall Be Determined By The Manufacturer Recommended Outside Air Reset Schedule. An Outside Air Temperature Sensor Shall Be Located At The Exterior Of The Boiler Room.

SEQUENCE OF OPERATION - EXHAUST FAN

Temperature Controlled Exhaust Fans (EF-4 To 13)

System Description

The Exhaust Fans Shall Operate When The Space Temperature Rises Above 80F (Adjustable) And Be Disabled When The Space Temperature Falls Below Setpoint Minus A Deadband Of 2F. The Fans Shall Have A Minimum Run Time Of Five Minutes Once Started.

Exhaust Fan EF-12 Shall Operate When The Light Switch In Either The Men's Or Women's Room Is Turned On.

Exhaust Fan EF-13 Shall Open A Motorized Damper In The Outside Air Louver Upon Activation For Pressure Relief. All Other Exhaust Fans Shall Utilize Existing Relief Systems.

GENERAL NOTES

1. All settings and setpoints are adjustable and shall be displayed at the unit and can be adjusted by users with administrator permissions.
2. Alarm and control setpoints shown are for initial deployment but may require adjustment where required as a result of field conditions, commissioning and / or test and balance. Final settings to be determined in the field by owner and contractor and captured in asbuilts.

PARTIAL SYMBOLS & ABBREVIATIONS

Identifier	Description
XX	Field Device or Sensor (See Designation)
XXX / X	Equipment Identification
DP	Differential Pressure Sensor
F	Flow Meter
FA	Fire alarm system relay

Identifier	Description
FZ	Freezestat (Low Temperature Switch)
HP	High Pressure Switch
LS	Light Switch
M	Motorized Actuator (Damper Or Control Valve)
MS	Motor Starter
P	Pressure Sensor
PS	Differential Pressure Switch
SP	Static Pressure Sensor
T	Temperature Sensor
VFD	Variable Frequency Drive

N

KEY PLAN

ROOF

1ST

VERTICAL PLAN

REV.	DATE	ISSUE DESCRIPTION	ITEM	DATE	ISSUE DESCRIPTION
A	6/23/23	ISSUE FOR BID AND DCA REVIEW			

24x36

dlbassociates consulting engineers
3600 Route 66, Suite 150 - #5981
Neptune NJ 07753
Questions For DLB Call: Dan Rehberg
DLB Project ID: 12636 Phone: 732-318-0314

project
NJDWSC WANAQUE SOUTH
HVAC & LIGHTING REPLACEMENT
310 FAIRFIELD ROAD
WAYNE, NJ 07470

title
CONTROLS DETAILS - 1

scale	drawn by	checked by	date	filename
AS SHOWN	CAD	DR	06/09/2023	12636M500

dwg. no.
M500

This Drawing Is The Property Of DLB Associates Consulting Engineers, PC. It Was Prepared Exclusively For This Particular Project And Is Limited To This Project Only. Unauthorized Reproduction Or Other Use Of These Drawings Or Ideas Is Prohibited.

Confidential and Proprietary / ©DLB Associates 2023

SEQUENCE OF OPERATION - AHU-1, 2

AHU-1, 2

System Description

The rooftop air handlers serve the pump room area. The AHUs are variable air volume single zone air handling units which provide general heating and ventilation. The AHUs supply heated air only to the space. The AHUs have economizer air dampers, modulating hot water heating section, and variable speed supply fan.

Supervisory Control

Supervisory control is handled by the unit controller and includes optimal start, equipment, and setpoint commands, monitoring, and alarming.

Occupancy Schedule

Unit controller provides adjustable occupied schedule and signals the unit to start in occupied mode.

Optimal Start - Morning Warmup

The AHUs shall start and run if required to raise the space temperature up to the occupied heating setpoints at the occupied start time. This algorithm is based on outside air temperature, space temperature, previous start time, and other adjustable factors. During this mode the unit runs as in the occupied mode except the outside air damper remains closed, relief air fan is off, and supply air temperature setpoint is 80°F. Unit enters occupied mode when the average space temperature is 68°F or occupancy start time is reached.

Occupied Heating

The economizer dampers are at minimum outside air and hot water heating control valve is modulated using a PID algorithm to maintain the supply air temperature at setpoint (64F adjustable).

Minimum Ventilation Airflow

The economizer dampers modulate using PID algorithm to maintain the outside airflow measured by the outside airflow station at the ventilation setpoint.

Airside Economizer

The economizer dampers shall be fixed at their minimum outside air position when conditions are not right for economization (outside air enthalpy greater than return air enthalpy). Economization is locked out when outside air dry bulb temperature exceeds 65°F

Supply Fan

Supply fan VFD speed is modulated using PID algorithm to maintain supply static duct pressure at setpoint.

Supply Duct Pressure Reset

ASHRAE Guideline 36P - Upon initial AHU startup supply duct static pressure setpoint shall be 0.5 in. w.c. After this initial startup delay, reset the setpoint from 0.5 in. w.c. to 1.5 in. w.c. using a "trim and respond" or "step and wait" approach.

Unoccupied / Standby Mode

Supply fan is off, the economizer dampers shall be closed to outside air (full return), and hot water coil valve closed.

Low Temperature Detector (Freeze Thermostat)

Low temperature detector averaging sensor on upstream face of heating coil shall disable the fan and open hot water valve via hardwire interlock when sensing temperatures below 40°F.

Smoke detector

Smoke detector shall be hardwired to the AHU supply fan start circuit. Upon activation, the smoke detector shall shut down the unit, and an alarm shall be generated that can be monitored by the equipment controller.

Mixed Air Low Temperature Limit

An averaging temperature sensor in the mixed air section will override economizer air damper control and close the outside air damper to maintain mixed air temperature above 50°F. Mixed air low limit control has priority over economizer cooling and CO2 control.

Supply Duct High Pressure Switch

A high supply duct static pressure switch in the AHU supply duct shall disable the fan via hardwire interlocked if the duct static pressure exceeds 3.0 in w.c. (field verify setpoint).

Air Filter Monitoring

A differential pressure sensor across the filter back is used to indicate filter change requirements. If the differential pressure exceeds 1.0 in. W.C. a dirty filter alarm is generated.

Communication Failure

Upon loss of communication of equipment controller with the unit, the unit shall default to occupied mode and maintain minimum outside air ventilation setpoint. All other control sequences remain the same. An alarm is generated at the equipment controller.

Controller or Power Failure

Upon failure of 120V power circuit or control transformer, the supply fan will stop, economizer dampers will fail to full recirculation, and heating will be disabled.

Freeze Protection Pump

The freeze protection pump shall run when the outside air temperature is below 45 degrees Fahrenheit or the low limit switch has been tripped.

SEQUENCE OF OPERATION - AHU-3

AHU-3

System Description

The air handler serves the office area. The AHU is a variable air volume single zone air handling unit which provide general cooling, heating, and ventilation to the space. The AHUs have economizer air dampers, DX cooling section, modulating hot water heating section, and variable speed supply fan.

Supervisory Control

Supervisory control is handled by the unit controller and includes optimal start, equipment, and setpoint commands, monitoring, and alarming.

Occupancy Schedule

Unit controller provides adjustable occupied schedule and signals the unit to start in occupied mode.

Optimal Start - Morning Warmup

The AHU shall start and run if required to raise the space temperature up to the occupied heating setpoint at the occupied start time. This algorithm is based on outside air temperature, space temperature, previous start time, and other adjustable factors. During this mode the unit runs as in the occupied mode except the outside air damper remains closed, relief air fan is off, and supply air temperature setpoint is 80°F. Unit enters occupied mode when the average space temperature is 68°F or occupancy start time is reached.

Optimal Start - Morning Cooldown (Pre-Cool)

The AHU shall start and run if required to decrease the space temperature to the occupied cooling setpoints at the occupied start time. This algorithm is based on outside air temperature, space temperature, previous start time, and other adjustable factors. During this mode the unit runs as in the occupied mode. Supply air temperature setpoint is fixed at 55°F and outside air damper is allowed to open for economizer cooling. Unit enters occupied mode when the average space temperature is 68°F or occupancy start time is reached.

Occupied Cooling

The economizer dampers and DX cooling coil shall modulate in sequence using a PID algorithm to maintain the supply air temperature at setpoint (74F adjustable). DX cooling is allowed to activate once economizer dampers are at 100% for 2 minutes.

Occupied Heating

The economizer dampers are at minimum outside air and hot water heating valve is modulated using a PID algorithm to maintain the supply air temperature at setpoint (70F adjustable). Simultaneous cooling and heating is not permitted.

Supply Air Temperature Reset

ASHRAE Guideline 36P - Upon initial AHU startup supply air temperature shall be 55°F. After this initial startup delay, reset the setpoint from 55°F to 65°F. using a "trim and respond" or "step and wait" approach. Every 2 minutes the BAS shall evaluate VAV terminal unit cooling demands and adjust the setpoint. If more than 2 VAV cooling demands are greater than 90% decrease the supply temperature setpoint by 0.2°F. If less than 1 zone has a cooling demand more than 90% increase the setpoint by 0.3°F in w.c. When in the dead band, maintain current setpoint.

Minimum Ventilation Airflow

The economizer dampers modulate using PID algorithm to maintain the outside airflow measured by the outside airflow station at the ventilation setpoint.

Airside Economizer

The economizer dampers shall be fixed at their minimum outside air position when conditions are not right for economization (outside air enthalpy greater than return air enthalpy). Economizer dampers open to outside air to provide free cooling as first "stage" of cooling prior to activating DX cooling based on differential enthalpy method. Economization is locked out when outside air dry bulb temperature exceeds 65°F

Supply Fan

Supply fan VFD speed is modulated using PID algorithm to maintain supply static duct pressure at setpoint.

Zone Dampers

Zone dampers shall modulate open based on temperature sensor input to maintain room temperature at setpoint (70F adjustable).

Supply Duct Pressure Reset

ASHRAE Guideline 36P - Upon initial AHU startup supply duct static pressure setpoint shall be 0.5 in. w.c. After this initial startup delay, reset the setpoint from 0.5 in. w.c. to 1.5 in. w.c. using a "trim and respond" or "step and wait" approach.

Unoccupied / Standby Mode

Supply fan is off, the economizer dampers shall be closed to outside air (full return), and hot water coil valve closed.

Low Temperature Detector (Freeze Thermostat)

Low temperature detector averaging sensor on upstream face of heating coil shall disable the fan and open hot water valve via hardwire interlock when sensing temperatures below 40°F.

Smoke detector

Smoke detector shall be hardwired to the AHU supply fan start circuit. Upon activation, the smoke detector shall shut down the unit, and an alarm shall be generated that can be monitored by the equipment controller.

Mixed Air Low Temperature Limit

An averaging temperature sensor in the mixed air section will override economizer air damper control and close the outside air damper to maintain mixed air temperature above 50°F. Mixed air low limit control has priority over economizer cooling and CO2 control.

Supply Duct High Pressure Switch

A high supply duct static pressure switch in the AHU supply duct shall disable the fan via hardwire interlocked if the duct static pressure exceeds 3.0 in w.c. (field verify setpoint).

Air Filter Monitoring

A differential pressure sensor across the filter back is used to indicate filter change requirements. If the differential pressure exceeds 1.0 in. W.C. a dirty filter alarm is generated.

Communication Failure

Upon loss of communication of equipment controller with the unit, the unit shall default to occupied mode and maintain minimum outside air ventilation setpoint. All other control sequences remain the same. An alarm is generated at the equipment controller.

Controller or Power Failure

Upon failure of 120V power circuit or control transformer, the supply fan will stop, economizer dampers will fail to full recirculation, and heating will be disabled.

Freeze Protection Pump

The freeze protection pump shall run when the outside air temperature is below 45 degrees Fahrenheit or the low limit switch has been tripped.

KEY NOTES (SYMBOLS 1, 2, ETC.)

1. Supply duct pressure sensor installed approximately 80% down supply air ductwork.
2. Provide multiple averaging freeze protection sensors if required for sufficient coil coverage.
3. Hardwire interlock to start fan circuit.

DCA REVIEW

GENERAL NOTES

1. All settings and setpoints are adjustable and shall be displayed at the unit and can be adjusted by users with administrator permissions.
2. Alarm and control setpoints shown are for initial deployment but may require adjustment where required as a result of field conditions, commissioning and / or test and balance. Final settings to be determined in the field by owner and contractor and captured in asbuilts.

PARTIAL SYMBOLS & ABBREVIATIONS

Identifier	Description
XX	Field Device or Sensor (See Designation)
XXX / X	Equipment Identification
DP	Differential Pressure Sensor
F	Flow
FA	Fire alarm system relay
FZ	Freezestat (Low Temperature Switch)
HP	High Pressure Switch
M	Motorized Actuator (Damper Or Control Valve)
PS	Differential Pressure Switch
SP	Static Pressure Sensor
T	Temperature Sensor
VFD	Variable Frequency Drive

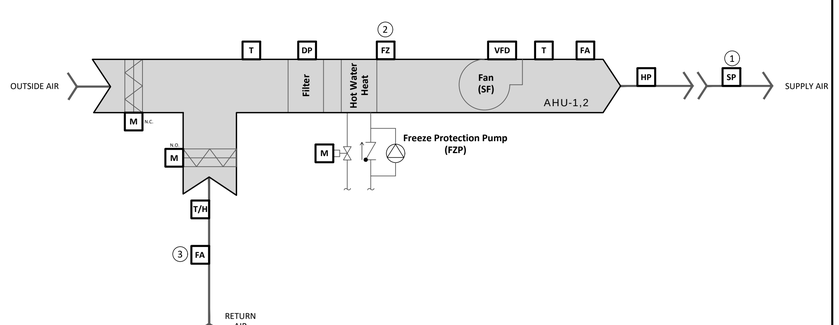

SYSTEM DIAGRAM - AHU-1,2

Scale: NTS

Drawing: M501
Detail: 01

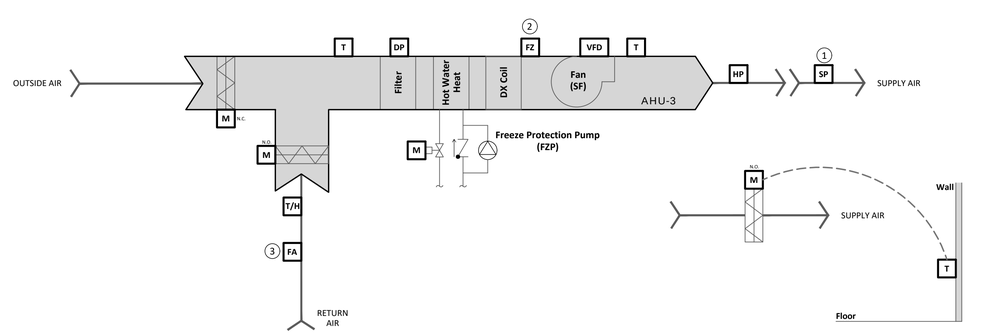

ZONE DAMPER CONTROL

SYSTEM DIAGRAM - AHU-3

Scale: NTS

Drawing: M501
Detail: 02

REV.	DATE	ISSUE DESCRIPTION	ITEM	DATE	ISSUE DESCRIPTION
A	6/23/23	ISSUE FOR BID AND DCA REVIEW			

24x36

dlbassociates consulting engineers
3600 Route 66, Suite 150 - #5981
Neptune NJ 07753
Questions For DLB Call: Dan Rehberg
DLB Project ID: 12636 Phone: 732-318-0314

project: NJDWSC WANAQUE SOUTH HVAC & LIGHTING REPLACEMENT 310 FAIRFIELD ROAD WAYNE, NJ 07470

title: CONTROLS DETAILS - 2

scale	drawn by	checked by	date	filename
AS SHOWN	CAD	DR	06/09/2023	12636M501

dwg. no. M501

This Drawing Is The Property Of DLB Associates Consulting Engineers, P.C. It Was Prepared Exclusively For This Particular Project And Is Limited To This Project Only. Unauthorized Reproduction Or Other Use Of These Drawings Or Ideas Is Prohibited.

Confidential and Proprietary / ©DLB Associates 2023

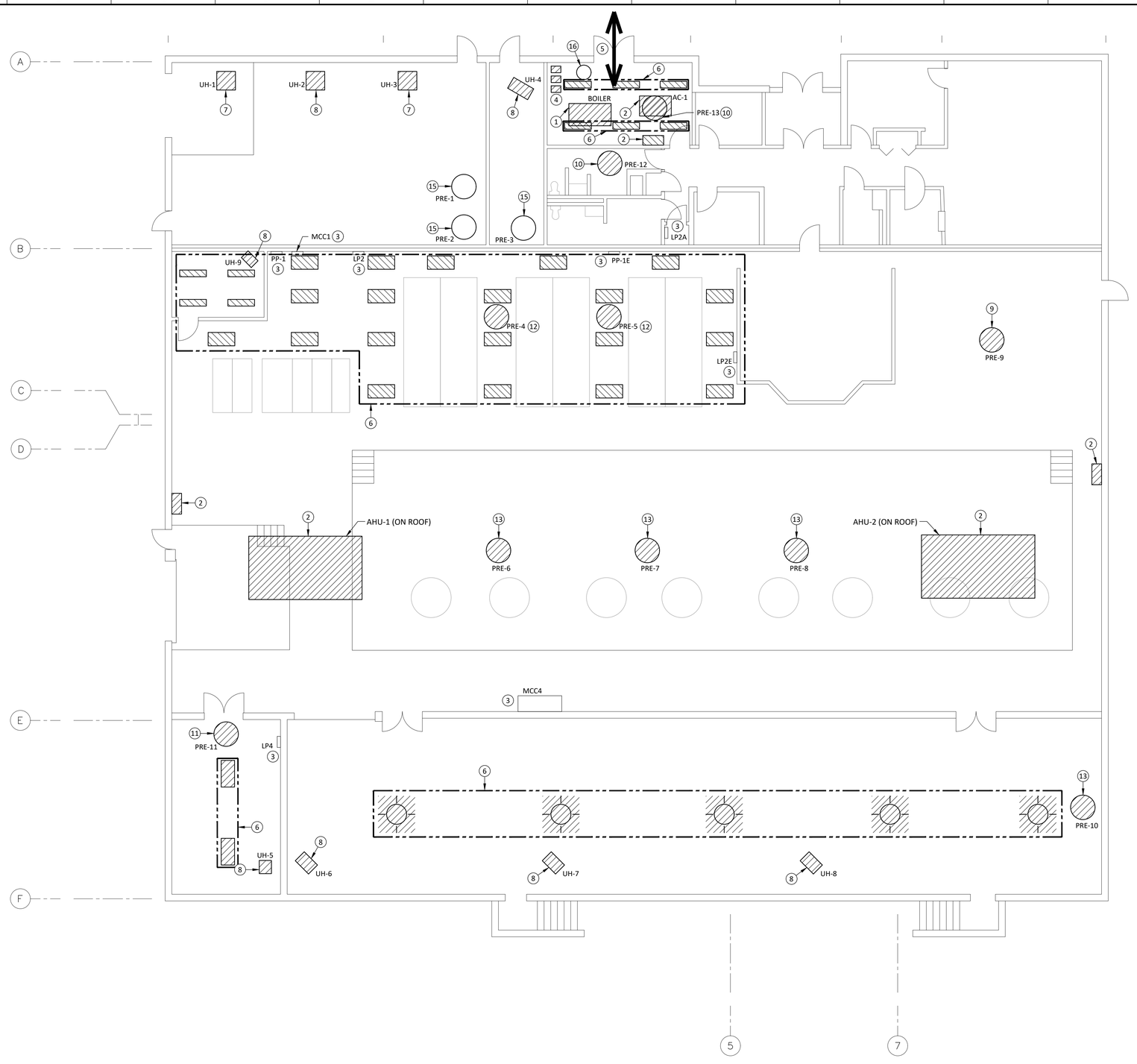

KEY NOTES (SYMBOLS 1, 2, ETC.)

1. Existing Boiler And All Electrical Connections To Be Removed. Power Is Fed From Panel PP-1E.
2. Existing Air Handler, Controls, And All Electrical Connections To Be Removed. Power Is Fed From Panel PP-1E.
3. Existing Panels To Remain.
4. Existing (3) Three Pumps And Controllers To Be Removed. Pumps Are Fed From Panel PP-1E.
5. Proposed Rigging Pathway Through Existing Double Door.
6. Existing Lighting Fixtures To Be Removed. Safe Off Wiring Until Ready For Installation Of New Lighting Fixtures. Power Is Fed From Panel LP-2A, LP-2E, And LP-4.
7. Existing Unit Heaters And All Electrical Connections To Be Removed. Power Is Fed From Panel PP-1E.
8. Existing Unit Heaters And All Electrical Connections To Be Removed. Power Is Fed From Panel LP-2E.
9. Existing Exhaust Fans And All Electrical Connections To Be Removed. Power Is Fed From Panel LP-2.
10. Existing Exhaust Fans And All Electrical Connections To Be Removed. Power Is Fed From Panel LP-2A.
11. Existing Exhaust Fans And All Electrical Connections To Be Removed. Power Is Fed From Panel LP-4.
12. Existing Exhaust Fans And All Electrical Connections To Be Removed. Power Is Fed From Panel MCC1.
13. Existing Exhaust Fans And All Electrical Connections To Be Removed. Power Is Fed From Panel MCC4.
14. Existing Air Handler, Controls, And All Electrical Connections To Be Removed. Power Is Fed From Panel PP-1.
15. Existing Equipment To Remain.
16. Existing Water Heater To Be Relocated. Wiring Shall Be Extended To New Location. Power Is Fed From Panel PP-1.

DCA REVIEW

GENERAL NOTES

1. Prior To Start Of Demolition Work, The Contractor Shall Coordinate Construction Schedule With NJDWSC Engineering Staff.
2. Trace Out And Label All Existing Conduit And Wiring In The Area Of Work And Affecting The Work Prior To Start Of Demolition.
3. Remove All Conduit, Wiring, Boxes And Devices Associated With Equipment To Be Demolished. Existing Conduit May Be Re-used.

PARTIAL SYMBOLS & ABBREVIATIONS

Identifier	Description
	Equipment To Be Replaced
	High Bay Fixture To Be Replaced

KEY PLAN

VERTICAL PLAN

ROOF
1ST

FLOOR PLAN

Scale: 1/8"=1'-0"

2' 4' 8' 16'

Drawing: E101
Detail: 01

REV.	DATE	ISSUE DESCRIPTION	ITEM	DATE	ISSUE DESCRIPTION
A	6/23/23	ISSUE FOR BID AND DCA REVIEW			

24x36

dlbassociates consulting engineers
3600 Route 66, Suite 150 - #5981
Neptune NJ 07753
Questions For DLB Call: Dan Rehberg
DLB Project ID: 12636 Phone: 732-318-0314

project
NJDWSC WANAQUE SOUTH
HVAC & LIGHTING REPLACEMENT
310 FAIRFIELD ROAD
WAYNE, NJ 07470

title
DEMOLITION PLAN

scale	drawn by	checked by	date	filename
AS SHOWN	CAD	DR	06/09/2023	12636E101

dwg. no.
E101

This Drawing Is The Property Of DLB Associates Consulting Engineers, PC. It Was Prepared Exclusively For This Particular Project And Is Limited To This Project Only. Unauthorized Reproduction Or Other Use Of These Drawings Or Ideas Is Prohibited.

Confidential and Proprietary / ©DLB Associates 2023

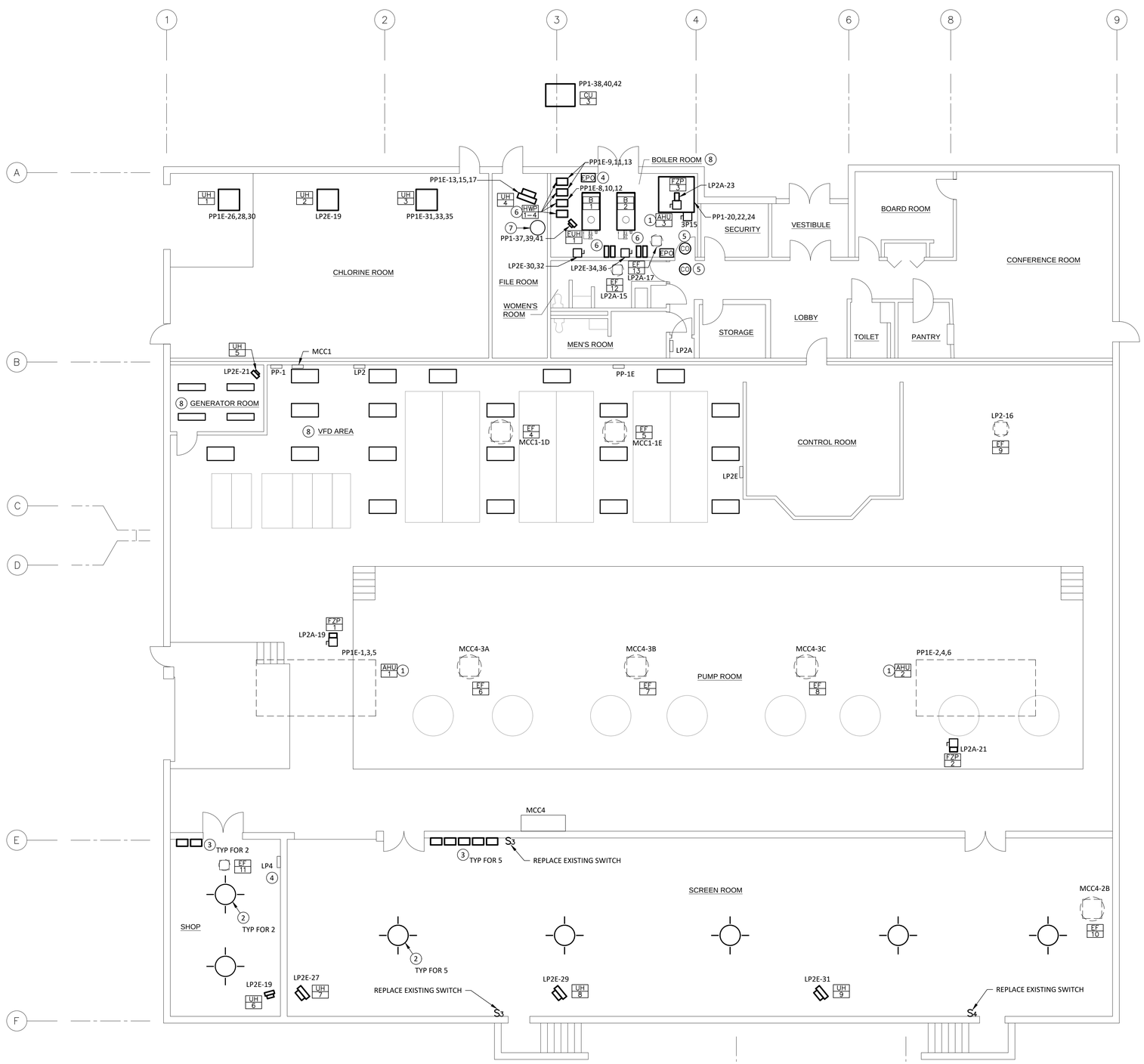

FLOOR PLAN Scale: 1/8"=1'-0" (2' 4' 8' 16')

Drawing: **E102**
Detail: **01**

KEY NOTES (SYMBOLS ①, ②, ETC.)

DCA REVIEW

1. Wire New Duct Smoke Detectors Provided With Units To Existing Fire Alarm Circuit.
2. Bottom Of Fixture At 29'-2" AFF With 3'-10" From Fixture To Ceiling. Provide Aladdin ALL200 Light Lift, Fixture Lowering Device, Installed At Each High Bay Light Fixture Location.
3. Provide Aladdin Smart Lift Controller For Each Aladdin ALL200 Light Lift. Provide Aladdin 4/C, 22AWG Control Cable In 3/4" Conduit From Each Smart Lift Controller To Each Aladdin ALL200 Light Lift. Wire Unswitched Hot Wire To Lift Motor And Wire Switched Leg To Light Fixture. Utilize Existing 120V Lighting Circuits From Existing Lighting Panel LP-4.
4. Boiler Emergency Power Off (EPO) Switches Shall Disconnect Power To Both Boilers And Gas Solenoid Valves. Wire Each Boiler Via An Individual Enclosed EPO Contactor. Wire EPO Switches To EPO Contactor. Provide Outlet Box And Cover Painted Red With Sign Reading "Boilers #1 And #2 Emergency Off Switch". Feed From LP2E Circuit To Each EPO Contactor And From Each Contactor To Each Boiler Disconnect Switch. All Wiring Shall Be 2#12, #12G, 3/4" Conduit. Each Contactor Shall Be 2 Pole 20A Mechanically Held, 208V Coil.
5. Stand Alone CO Detector With Sounder Base.
6. Wire Each Hot Water Pump Pump Via Its Respective VFD. Coordinate VFD Locations In Field With Owner To Meet Required NEC 42" Front Working Clearance From Front Of VFD To Grounded Surface, 30" Wide.
7. Extend Wiring And Conduit To New Water Heater Location With 3#10, #10G, In 3/4" Conduit.
8. Install New Lighting Fixtures. Re-Use Existing 120V Lighting Circuits From Existing Panels, Extend Wiring As Required. 20 Lighting Fixtures In VFD Area, Six Lighting Fixtures In Boiler Room, And Four In Generator Room.

GENERAL NOTES

1. Relocate Existing Lighting As Required To Accommodate New Boilers And Existing Boiler Demolition.
2. For New Circuit Breakers Being Provided In Existing Panels, Contractor Shall Verify And Coordinate Exact Circuit Breaker Characteristics With Existing Distribution Panels. Match Existing Short Circuit Ratings. Provide Manufacturer Approved Kits And Hardware. Field Verify Existing Panels And Circuit Numbers That Are Being Used For New Work. Provide New, Typed Panel Directories.
3. Where Existing Conduits Are Re-Used, Extend Conduit As Required To New Equipment.
4. Circuit Numbers Shown Are Based On Existing 1984 Drawing Panel Schedules. Confirm Actual Circuit Numbers In Field.
5. Measure Existing Load On All Existing Panels / MCCs Being Used For New Work. Submit As-Built Panel Schedule Showing Each Existing Circuit And Listing Measured Current On Each Feeder / Branch And On Panel Mains. Coordinate With Owner To Energize All Existing Panel Loads Prior To Measurement.
6. Coordinate Electrical Equipment Locations In The Field To Meet Required NEC Working Clearance And Dedicated Space Requirements Per NEC 110.26. Do Not Locate Electrical Equipment Directly Below Piping, Ductwork, And Other Non-Electrical Items.
7. Refer To E103 For Lightning Protection Requirements For Rooftop Equipment.
8. Engage Existing Fire Alarm Service Company To Test Fire Alarm System After Connection Of New Devices.
9. Variable Frequency Drive Requirements (See Specification For Additional Details):
   a. Listed And Labeled As Defined In NFPA 70.
   b. Status Lights
   c. Panel-Mounted Operator Station Including Hand, Off, And Auto Modes.
   d. Operational Parameter Indication
   e. Control Signal Interfaces
   f. VFDs To Be Located By Contractor And Approved In Field By Owner Prior To Installation

PARTIAL SYMBOLS & ABBREVIATIONS

Identifier	Description	Identifier	Description
	New Rooftop Equipment		New Equipment
	High Bay LED Fixture	CO	Carbon Monoxide Detector
	Existing Equipment		Fused Disconnect Number Indicates Poles And Fuse Size

KEY PLAN

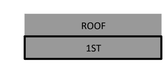

VERTICAL PLAN

REV.	DATE	ISSUE DESCRIPTION	ITEM	DATE	ISSUE DESCRIPTION
A	6/23/23	ISSUE FOR BID AND DCA REVIEW			

dlbassociates consulting engineers
3600 Route 66, Suite 150 - #5981
Neptune NJ 07753
Questions For DLB Call: Dan Rehberg
DLB Project ID: 12636 Phone: 732-318-0314

project: NJDWSC WANAQUE SOUTH HVAC & LIGHTING REPLACEMENT 310 FAIRFIELD ROAD WAYNE, NJ 07470

title: NEW WORK PLAN

scale	drawn by	checked by	date	filename
AS SHOWN	CAD	DR	06/09/2023	12636E102

dwg. no. E102

24x36

This Drawing Is The Property Of DLB Associates Consulting Engineers, PC. It Was Prepared Exclusively For This Particular Project And Is Limited To This Project Only. Unauthorized Reproduction Or Other Use Of These Drawings Or Ideas Is Prohibited.

Confidential and Proprietary / ©DLB Associates 2023

LIGHTING FIXTURE SCHEDULE

SYMBOL	TYPE	DESCRIPTION	TYPICAL LOCATION & APPLICATION	MOUNTING	VOLTAGE	LAMP TYPE	WATTAGE PER UNIT	MFG	CATALOG NUMBER (BASED ON LITHONIA)
	A	High Bay, 22" Diameter LED Lighting Fixture Marine Grade Forged Aluminum Housing	Screen Room	Ceiling	120	LED	224	Kenall Manufacturing	EPHB-22-UI-PM-CP-GW-224L-40K8-DCC-DV-R56
	B	LED Strip Light, 48" Long With Wire Guard	Boiler and Generator Rooms	Suspended	120	LED	35	Lithonia	CSS Contractor Single Strip LED
	C	LED 2x4, 48" Long	VFD Area	Suspended	120	LED	29	Lithonia	MSL-4000LM-L/LV-MVOLT

NOTES:
1. The Contractor Shall Provide Detailed Shop Drawings Of All Lighting Fixtures Including: Luminaire Data, Photometric Reports, Lamp Information, Emergency Lighting Equipment And Accessories Identified Above.
2. All Fluorescent Lighting Fixtures Shall Be Equipped With Energy Saving Low Mercury Lamps And Electronic Ballasts With A Total Harmonic Distortion <10%.
3. All Ballasts Shall Be Manufactured By Advance, Osram Sylvania, Universal, General Electric, Or Engineer Approved Equal.
4. Emergency Lighting Fixture's Specified With An Emergency Battery Pack Shall Provide 1,000 Lumens Minimum, Illuminate 2 Lamps For 90 Minutes, And Be Wired Ahead Local Switching.
5. All Ballasts Must Be Compatible And Coordinated With The Lighting Control System.
6. For Cable Hung Fixtures, Provide Additional Cabling For Emergency Battery Pack Power As Required.

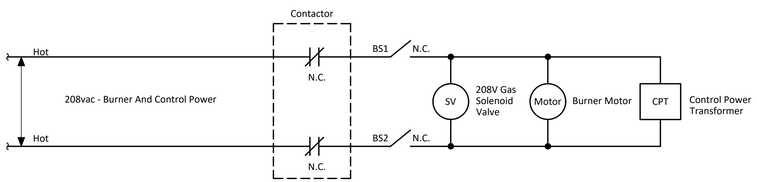

Typical Wiring Diagram

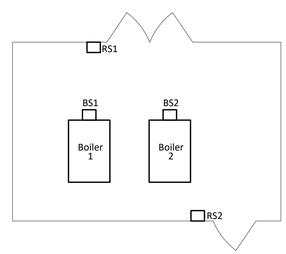

Boiler Room Key Plan

NOTES:
1. BS1 And BS2 Are Lockable, Power Disconnect Switches Located At The Boiler (May Be Integral) That Will Disconnect All Power To The Boiler For Maintenance Purposes.
2. RS1 And RS2 Are Remote, Emergency Shutdown Switches Located By Exit Doors. Switches Shall Be DPST To Interface Up To Four Boilers And Two Remote Switches. Locate Switches Outside Of Room If Secure Location. If Not, Keep Switches Inside Of Room.
3. All Switches Shall Be Mushroom-Type Push Button And Rated For Circuit Ampacity And Boiler Motor HP. They Shall Have Red Cover Plates With Polycarbonate Piano-Hinge Covers To Prevent Accidental Activation. They Shall Be Marked With "Emergency Boiler Shutdown".

BOILER EMERGENCY SHUTDOWN WIRING DIAGRAM

Scale: NTS

Drawing: **E103**
Detail: **01**

PROJECT ELECTRICAL NOTES

Electrical Wiring

1. In General, Branch Circuit Wiring Is Not Shown On The Plan Drawings. Numerals Adjacent To Symbols For Receptacles, Motors, Appliances, Etc. Indicate The Panelboard And Circuit Number To Which The Item Is To Be Connected. Provide Branch Circuit Wiring For All Items Shown In Accordance With These General Notes And The Electrical Specifications.
2. Branch Circuit Wiring, Where Shown Is Intended To Show Specific Rounting Requirements.
3. Mechanical Equipment (Motors, HVAC Equipment, Etc.) Is Shown On Electrical Plan Drawings For Coordination And Are Only Approximate Locations. Refer To Mechanical Plans For Exact Locations.
4. All 1 Pole, 15 And 20 Amp Branch Circuits Serving Receptacles Or Lighting Shall Be 2 Wire Circuits Providing An Individual Neutral Conductor For Each Ungrounded (Hot) Circuit Conductor. Do Not Share Neutral Conductors.
5. The Minimum Branch Circuit Wiring Size Shall Be 2#12, #12 Ground In 3/4 Inch Conduit Unless Otherwise Noted.

Wiring Methods

1. General
   A. In Finished Areas, Conceal All Wiring In Building Walls, Floors, And Above Finished Ceilings. Wiring May Be Run Exposed In Mechanical/Electrical Equipment Rooms, Electrical Closets, Utility Rooms, And Unfinished Basements. No Wiring Shall Be Installed Exposed On The Outside Surfaces Of The Building(s).
   B. Final Connections To Mechanical Equipment, Lighting Fixtures, Motors, Transformers, Instruments, And Control Devices Shall Be Flexible Conduit To Minimize Vibration Transmission.
2. Indoors (Unclassified Areas)
   A. Exposed: RGS Threaded Conduit
   B. Final Connections: (Liquid-Tight Flexible Conduit Areas) Flexible Metal Conduit In Damp Or Wet

Equipment Grounding

1. An Insulated (Green) Equipment Ground Conductor(s) Shall Be Provided In All Feeders And Branch Circuits. Utilizing The Conduit As The Equipment Grounding Conductor Is Not Acceptable.

Electrical Enclosures And Terminations

1. Electrical Equipment Enclosures Shall Be Provided As Listed Below Unless Otherwise Noted.
   D. Indoors Unclassified Areas NEMA 1
   E. Indoors Classified 'Damp' NEMA 1
   F. Outdoors NEMA 3R
2. Electrical Terminations (Lugs, Terminals, Etc.) On All Equipment Shall Be Rated For Use With 75 Degree Celsius Conductors.

ELECTRICAL SYMBOL LIST

Identifier	Description
	Electrical Conduit
	Electrical Conduit Run Concealed Via Floors, Walls, Underground
	Conduit Homerun
	Conduit Turned Up
	Conduit Turned Down
	Conduit End (Capped)
	Existing Equipment And / Or Wiring
	Existing Equipment And / Or Wiring To Be Removed
	Junction Box

DCA REVIEW

LIGHTNING PROTECTION NOTES

1. Existing Building Lightning Protection System Shall Remain. Lighting Protection Shall Be Temporarily Removed During Demolition And Extended To New Equipment Installed On Roof.
2. System Shall Be Designed Per NFPA 780 And UL 96. Provide Master Label Certification Upon Completion Of Construction.
3. Lightning Protection System Is Delegated Design. Contractor Shall Engage A UL 96A And LPI Certified Lightning Protection Designer / Installer Specializing In Lightning Protection Design To Prepare Full Shop Drawing And Submittal Package.

ELECTRICAL ABBREVIATIONS

Identifier	Description	Identifier	Description
A	Amp	MDS	Main Distribution Switchboard
AC	Alternating Current	MLO	Main Lugs OnlyMOCP Maximum Overcurrent Protection
AF	Amp Frame	MV	Medium Voltage (> 600V)
AIC	Interrupting Capacity (RMS Symmetrical Amperes)	N	Neutral (Grounded Circuit Conductor)
AFI, AFCI	Arc Fault Current Interrupter	NC	Normally Closed
AT	Amp Trip	NEC	National Electrical Code
ATS	Automatic Transfer Switch	NEMA	National Elect. Manufacturer's Assoc.
C	Conduit	NO	Normally Open
CB	Circuit Breaker	NL	Night Light
CT	Current Transformer	PH, ϕ	Phase
DC	Direct Current	PF	Power Factor
EMT	Electrical Metallic Tubing	PRI	Primary
FACP	Fire Alarm Control Panel	PNL	Panel
G, GND	Ground	RECEPT	Receptacle
GFI, GFCI	Ground Fault Circuit Interrupter	RGS	Rigid Galvanized Steel
HV	High Voltage (> 69,000V)	SEC	Secondary
IG	Isolated Ground	STP	Shielded Twisted Pair
IMC	Intermediate Metal Conduit	SWBD	Switchboard
JB, J	Junction Box	TMCC	Temperature Motor Control Center
KCMIL	Thousand Circular Mil	UTP	Unshielded Twisted Pair
LRA	Locked Rotor Amps	V	Volt
LV	Low Voltage (< 50V)	VA	Volt-Ampere
MC	Metal Clad Cable	VAR	Volt-Ampere Reactive
MCB	Main Circuit Breaker	W	Watts
MCC	Motor Control Center	WP	Weatherproof
MDP	Main Distribution Panel	XFMR	Transformer

REV.	DATE	ISSUE DESCRIPTION	ITEM	DATE	ISSUE DESCRIPTION
A	6/23/23	ISSUE FOR BID AND DCA REVIEW			

24x36

dlbassociates consulting engineers
3600 Route 66, Suite 150 - #5981
Neptune NJ 07753
Questions For DLB Call: Dan Rehberg
DLB Project ID: 12636 Phone: 732-318-0314

project: NJDWSC WANAQUE SOUTH HVAC & LIGHTING REPLACEMENT 310 FAIRFIELD ROAD WAYNE, NJ 07470

title: LIGHTING SCHEDULE AND NOTES

scale	drawn by	checked by	date	filename
AS SHOWN	DR	PE	06/09/2023	12636E103

dwg. no. E103

This Drawing Is The Property Of DLB Associates Consulting Engineers, PC. It Was Prepared Exclusively For This Particular Project And Is Limited To This Project Only. Unauthorized Reproduction Or Other Use Of These Drawings Or Ideas Is Prohibited.

Confidential and Proprietary / ©DLB Associates 2023

SCHEDULE FOR MOTOR CONTROL CENTER: Existing MCC-1

SYSTEM: **480Y/277V, 3Φ, 4W 300A Vertical Bus, 1 Section** | EQUIP. GROUND BUS: **YES** | AREA SERVED: **WSPS**
MAIN BUS: | MCC SCCR: **100kA RMS SYM** | MCC CLASS: | MCC LOCATION: **WSPS**
MAINS TYPE: | MAINS RATING: **N / A** | MCC TYPE: | MOUNTING: **FLOOR** | SUPPLIED FROM:

ID #	SERVES	EQUIPMENT LOCATION	MOTOR HP	MOTOR PF	KVA	AMPS	MCP	CIR. BKR. P	CIR. BKR. TRIP	STARTER TYPE	STARTER SIZE	MINMUM FEEDER AND CONDUIT SIZE	CONTROL QTY.	CONTROL SIZE	OPTIONS	NOTES
1	Bucket 1A															2
2	Bucket 1C															2
3	Bucket 1D															2
4	Bucket 1D, EF-4, formerly PRE-4	Pump Switchgear Rm	5		6.3	8		3	15			3#12, #12G, 3/4"C				1, 3, 4
5	Bucket 1E, EF5, formerly PRE-5	Pump Switchgear Rm	5		6.3	8		3	15			3#12, #12G, 3/4"C				1, 3, 4
6	Bucket 1F															2
7																
8																
9																
10																
11																
12																

TOTAL CONNECTED LOAD (kVA) 13
TOTAL CONNECTED LOAD (AMPS) 15

NOTES:
1. Provide new wiring in existing conduit. Provide new breaker. 2. Existing loads to remain are not shown. Connected load indicated reflects only equipment being replaced.
2. Existing panel demand is not expected to change. Existing Exhaust Fans are being replaced in kind. 4. Reconfigure bucket, remove existing components, provide new thermal magnetic breaker.

SCHEDULE FOR MOTOR CONTROL CENTER: Existing MCC-4

SYSTEM: **480Y/277V, 3Φ, 4W** | EQUIP. GROUND BUS: **YES** | AREA SERVED: **WSPS**
MAIN BUS: **600 A** | MCC SCCR: **100kA RMS SYM** | MCC CLASS: | MCC LOCATION: **WSPS**
MAINS TYPE: **MLO** | MAINS RATING: **N / A** | MCC TYPE: | MOUNTING: **FLOOR** | SUPPLIED FROM:

ID #	SERVES	EQUIPMENT LOCATION	MOTOR HP	MOTOR PF	KVA	AMPS	MCP	CIR. BKR. P	CIR. BKR. TRIP	STARTER TYPE	STARTER SIZE	MINMUM FEEDER AND CONDUIT SIZE	CONTROL QTY.	CONTROL SIZE	OPTIONS	NOTES
1	Bucket 1A, 1B, 1C, 1D, 1E															2
2	Bucket 2A															2
3	Bucket 2B, EF-10, formerly PRE-10	Screen Room	5		6.3	8		3	15			3#12, #12G, 3/4"C				1, 3, 4
4	Bucket 2D															2
5	Bucket 2E															2
6	Bucket 3A, EF-6, formerly PRE-6	Pump Room	2		2.8	3		3	15			3#12, #12G, 3/4"C				1, 3, 4
7	Bucket 3B, EF-7, formerly PRE-7	Pump Room	2		2.8	3		3	15			3#12, #12G, 3/4"C				1, 3, 4
8	Bucket 3C, EF-8, formerly PRE-8	Pump Room	2		2.8	3		3	15			3#12, #12G, 3/4"C				1, 3, 4
9	Bucket 3D															2
10	Bucket 3E incoming line															
11																
12																

TOTAL CONNECTED LOAD (kVA) 15
TOTAL CONNECTED LOAD (AMPS) 18

NOTES:
1. Provide new wiring in existing conduit. Provide new breaker. 2. Existing loads to remain are not shown. Connected load indicated reflects only equipment being replaced.
2. Existing panel demand is not expected to change. Existing Exhaust Fans are being replaced in kind. 4. Reconfigure bucket, remove existing components, provide new thermal magnetic breaker.

SCHEDULE FOR PANEL: Existing LP4

SYSTEM: **208Y/120V, 3Φ, 4W** | NUMBER OF POLES: **42** | AREA SERVED: **WSPS**
BUS RATING: **100 A** | MINIMUM CB IC: **10kA RMS SYM** | EQUIP GROUND BUS: **YES** | PANEL LOCATION: **WSPS**
MAINS TYPE: **MLO** | MAINS RATING: **N / A** | ISOLATED GND BUS: **NO** | MOUNTING: **SURFACE** | SUPPLIED FROM:

CIR. #	SERVES	LOAD	MINIMUM BRANCH CIRCUIT & CONDUIT SIZE	BREAKER P	BREAKER TRIP	PHASE A	PHASE B	PHASE C	BREAKER TRIP	BREAKER P	MINIMUM BRANCH CIRCUIT & CONDUIT SIZE	LOAD	SERVES	CIR. #
1						0								2
3							0							4
5	See Note 2							0					See Note 2	6
7						0								8
9							0							10
11								0						12
13						0								14
15							0							16
17								0						18
19						0								20
21							1120		20	1	2#12, #12 G, 3/4" C	1120	Screen Room Lighting, note 1	22
23								0						24
25						0								26
27							0							28
29								0						30
31						0								32
33							0							34
35								0						36
37						0								38
39							0							40
41								0						42

	A	B	C			
	0	1120	0	VA PER PHASE		
TOTAL CONNECTED LOAD (VA) 1120	0	9	0	AMPS PER PHASE	3	**TOTAL CONNECTED LOAD (AMPS)**

NOTES:
1. Provide new wiring in existing conduit. Re-use existing breaker. 2. Existing loads to remain are not shown. Connected load indicated reflects only equipment being replaced.
3. Existing panel demand is not expected to change. Existing lighting being replaced with new lighting.

SCHEDULE FOR PANEL: Existing LP2A

SYSTEM: **208Y/120V, 3Φ, 4W** | NUMBER OF POLES: **30** | AREA SERVED: **WSPS**
BUS RATING: **225 A** | MINIMUM CB IC: **10kA RMS SYM** | EQUIP GROUND BUS: **YES** | PANEL LOCATION: **WSPS**
MAINS TYPE: **MLO** | MAINS RATING: **N / A** | ISOLATED GND BUS: **NO** | MOUNTING: **SURFACE** | SUPPLIED FROM:

CIR. #	SERVES	LOAD	MINIMUM BRANCH CIRCUIT & CONDUIT SIZE	BREAKER P	BREAKER TRIP	PHASE A	PHASE B	PHASE C	BREAKER TRIP	BREAKER P	MINIMUM BRANCH CIRCUIT & CONDUIT SIZE	LOAD	SERVES	CIR. #
1						0								2
3							0							4
5	See Note 2							0					See Note 2	6
7						0								8
9							0							10
11								0						12
13						0								14
15	EF-12, formerly fed PRE-12, note 1	530	2#12, #12 G, 3/4" C	1	20		530							16
17	EF-13, Formerly fed PRE-13, note 1	530	2#12, #12 G, 3/4" C	1	20			530						18
19	FZP-1, note 4	1176	2#12, #12 G, 3/4" C	1	20	1176								20
21	FZP-2, note 4	1176	2#12, #12 G, 3/4" C	1	20		1176							22
23	FZP-3, note 4	1176	2#12, #12 G, 3/4" C	1	20			1176						24
25						0								26
27							0							28
29								0						30

	A	B	C			
	1176	1706	1706	VA PER PHASE		
TOTAL CONNECTED LOAD (VA) 4588	10	14	14	AMPS PER PHASE	13	**TOTAL CONNECTED LOAD (AMPS)**

NOTES:
1. Provide new wiring in existing conduit. Re-use existing breaker. 2. Existing loads to remain are not shown. Connected load indicated reflects only equipment being replaced.
3. Existing panel demand of 23KW is increased by 3.5KW (3 HW pumps). Two existing exhaust fans are being replaced in kind. 4. Provide new breaker, new wiring and new conduit.

DCA REVIEW

This Drawing Is The Property Of DLB Associates Consulting Engineers, PC. It Was Prepared Exclusively For This Particular Project And Is Limited To This Project Only. Unauthorized Reproduction Or Other Use Of These Drawings Or Ideas Is Prohibited.

24x36

REV.	DATE	ISSUE DESCRIPTION	ITEM	DATE	ISSUE DESCRIPTION
A	6/23/23	ISSUE FOR BID AND DCA REVIEW			

dlbassociates consulting engineers
3600 Route 66, Suite 150 - #5981
Neptune NJ 07753
Questions For DLB Call: Dan Rehberg
DLB Project ID: 12636 Phone: 732-318-0314

project: NJDWSC WANAQUE SOUTH HVAC & LIGHTING REPLACEMENT 310 FAIRFIELD ROAD WAYNE, NJ 07470

title: PANEL SCHEDULES - 1

scale	drawn by	checked by	date	filename
AS SHOWN	DR	PE	06/09/2023	12636E104

dwg. no. E104

Confidential and Proprietary / ©DLB Associates 2023

SCHEDULE FOR PANEL: Existing LP2E

SYSTEM: **208Y/120V, 3Φ, 4W**	NUMBER OF POLES: **42**	AREA SERVED: **WSPS**	
BUS RATING: **225 A** MINIMUM CB IC: **10kA RMS SYM**	EQUIP GROUND BUS: **YES**	PANEL LOCATION: **WSPS**	
MAINS TYPE: **MLO** MAINS RATING: **N / A**	ISOLATED GND BUS: **NO**	MOUNTING: **SURFACE**	SUPPLIED FROM:

CIR. #	SERVES	LOAD	MINIMUM BRANCH CIRCUIT & CONDUIT SIZE	BREAKER P	BREAKER TRIP	PHASE A	PHASE B	PHASE C	BREAKER TRIP	BREAKER P	MINIMUM BRANCH CIRCUIT & CONDUIT SIZE	LOAD	SERVES	CIR. #
1						0								2
3							0							4
5	See Note 2							0					See Note 2	6
7						0								8
9							0							10
11								0						12
13						0								14
15							0							16
17								0						18
19	UH-2 & 6, formerly UH-2,4,9 notes 1&5	940	2#12, #12 G, 3/4" C	1	20	940								20
21	UH-4&5, formerly UH5,6,7,8 notes 1&5	1200	2#12, #12 G, 3/4" C	1	20		1200							22
23								0						24
25						0								26
27	UH-7, notes 1 & 4	864	2#12, #12 G, 3/4" C	1	15		864							28
29	UH-8, notes 1 & 4	864	2#12, #12 G, 3/4" C	1	15			1696	20	2	2#12, #12 G, 3/4" C	832	Boiler B-1, Notes 4 & 6	30
31	UH-9, notes 1 & 4	864	2#12, #12 G, 3/4" C	1	15	1696						832	And 208V Gas Solenoid Valve	32
33							832		20	2	2#12, #12 G, 3/4" C	832	Boiler B-2, Notes 4 & 6	34
35								832				832	And 208V Gas Solenoid Valve	36
37						0								38
39							0							40
41								0						42
						2636	2896	2528	VA PER PHASE					
						22	24	21	AMPS PER PHASE					

TOTAL CONNECTED LOAD (VA) 8060 — **22** **TOTAL CONNECTED LOAD (AMPS)**

NOTES:
1. Provide new wiring in existing conduit. 2. Existing loads to remain are not shown. Connected load indicated reflects only equipment being replaced.
3. Existing panel demand is not expected to change. Existing unit heaters are being replaced in kind. 4. Provide New Breaker. 5. Re-use existing breaker. 6. Provide new conduit and wiring.

SCHEDULE FOR PANEL: Existing PP1

SYSTEM: **480Y/277V, 3Φ, 4W**	NUMBER OF POLES: **42**	AREA SERVED: **WSPS**	
BUS RATING: **250 A** MINIMUM CB IC: **100kA RMS SYM**	EQUIP GROUND BUS: **YES**	PANEL LOCATION: **WSPS**	
MAINS TYPE: **MCB** MAINS RATING: **200 A**	ISOLATED GND BUS: **NO**	MOUNTING: **SURFACE**	SUPPLIED FROM:

CIR. #	SERVES	LOAD	MINIMUM BRANCH CIRCUIT & CONDUIT SIZE	BREAKER P	BREAKER TRIP	PHASE A	PHASE B	PHASE C	BREAKER TRIP	BREAKER P	MINIMUM BRANCH CIRCUIT & CONDUIT SIZE	LOAD	SERVES	CIR. #
1						0								2
3							0							4
5	See Note 2							0					See note 2	6
7						0								8
9							0							10
11								0						12
13						0								14
15							0							16
17								0						18
19						1551						1551	Formerly fed Office Air Conditioning	20
21							1551		15	3	3#12, #12 G, 3/4" C	1551	AHU-3, Office Air Conditioning, Note 1	22
23								1551				1551		24
25						0								26
27							0							28
29								0						30
31						0								32
33							0							34
35								0						36
37		1000				5432						4432		38
39	EUH-1, 3KW, Boiler Room, Note 1	1000	3#12, #12 G, 3/4" C	3	15		5432		25	3	3#10, #10 G, 3/4" C	4432	CU-3, Office Air Conditioning.	40
41		1000						5432				4432		42
						6983	6983	6983	VA PER PHASE					
						25	25	25	AMPS PER PHASE					

TOTAL CONNECTED LOAD (VA) 20949 — **25** **TOTAL CONNECTED LOAD (AMPS)**

NOTES:
1. Provide new wiring in existing conduit. Provide new breaker. 2. Existing loads to remain are not shown. Connected load indicated reflects only equipment being replaced.
2. Existing panel demand is not expected to change. Existing Office air conditioning is being replaced in kind. A 3KW unit heater is being added which is not concurrent with the AC load.

SCHEDULE FOR PANEL: Existing LP2

SYSTEM: **208Y/120V, 3Φ, 4W**	NUMBER OF POLES: **30**	AREA SERVED: **WSPS**	
BUS RATING: **225 A** MINIMUM CB IC: **10kA RMS SYM**	EQUIP GROUND BUS: **YES**	PANEL LOCATION: **WSPS**	
MAINS TYPE: **MLO** MAINS RATING: **N / A**	ISOLATED GND BUS: **NO**	MOUNTING: **SURFACE**	SUPPLIED FROM:

CIR. #	SERVES	LOAD	MINIMUM BRANCH CIRCUIT & CONDUIT SIZE	BREAKER P	BREAKER TRIP	PHASE A	PHASE B	PHASE C	BREAKER TRIP	BREAKER P	MINIMUM BRANCH CIRCUIT & CONDUIT SIZE	LOAD	SERVES	CIR. #
1						0								2
3							0							4
5	See Note 2							0					See Note 2	6
7						0								8
9							0							10
11								0						12
13						0								14
15							1920		30	1	2#10, #10 G, 3/4" C	1920	EF-9, Formerly PRE-9	16
17								0					Provide new breaker, see note 1	18
19						0								20
21							0							22
23								0						24
25						0								26
27							0							28
29								0						30
						0	1920	0	VA PER PHASE					
						0	16	0	AMPS PER PHASE					

TOTAL CONNECTED LOAD (VA) 1920 — **5** **TOTAL CONNECTED LOAD (AMPS)**

NOTES:
1. Provide new wiring in existing conduit. 2. Existing loads to remain are not shown. Connected load indicated reflects only equipment being replaced.
3. Existing panel demand is not expected to change. Existing exhaust fan is being replaced in kind.

SCHEDULE FOR PANEL: Existing PP1E

SYSTEM: **480Y/277V, 3Φ, 4W**	NUMBER OF POLES: **42**	AREA SERVED: **WSPS**	
BUS RATING: **125 A** MINIMUM CB IC: **100kA RMS SYM**	EQUIP GROUND BUS: **YES**	PANEL LOCATION: **WSPS**	
MAINS TYPE: **MCB** MAINS RATING: **100 A**	ISOLATED GND BUS: **NO**	MOUNTING: **SURFACE**	SUPPLIED FROM:

CIR. #	SERVES	LOAD	MINIMUM BRANCH CIRCUIT & CONDUIT SIZE	BREAKER P	BREAKER TRIP	PHASE A	PHASE B	PHASE C	BREAKER TRIP	BREAKER P	MINIMUM BRANCH CIRCUIT & CONDUIT SIZE	LOAD	SERVES	CIR. #
1		5784				11568						5784		2
3	AHU-1, formerly AHU-1, Note 1	5784	3#10, #10 G, 3/4" C	3	30		11568		30	3	3#10, #10 G, 3/4" C	5784	AHU-2, formerly AHU-2, Note 1	4
5		5784						11568				5784		6
7		1662				1662								8
9	HWP-1 & 2, formerly Circ. Pump 1	1662	3#12, #12 G, 3/4" C	3	20		3767		20	3	3#12, #12 G, 3/4" C	2105	HWP-3, formerly Circulating Pump 3	10
11	2 @ 1 HP each, Note 1	1662						3767				2105	3 HP, Note 1	12
13		2105				4210						2105		14
15	HWP-4, formerly Circulating Pump 2	2105	3#12, #12 G, 3/4" C	3	20		2105						See Note 2	16
17	3 HP, Note 1	2105						2105						18
19						0								20
21	See Note 2						0							22
23								0						24
25						442						442		26
27							442		20	3	3#12, #12 G, 3/4" C	442	UH-1, formerly UH-1, Note 1, 3/4HP	28
29								442				442		30
31		442				442								32
33	UH-3, formerly UH-3, Note 1, 3/4HP	442	3#12, #12 G, 3/4" C	3	20		442							34
35		442						442						36
37						0								38
39							0							40
41								0						42
						18324	18324	18324	VA PER PHASE					
						66	66	66	AMPS PER PHASE					

TOTAL CONNECTED LOAD (VA) 54972 — **66** **TOTAL CONNECTED LOAD (AMPS)**

NOTES:
1. Provide new wiring in existing conduit. Re-use existing breaker. 2. Existing loads to remain are not shown. Connected load indicated reflects only equipment being replaced.
3. Existing panel demand is not expected to change. Two existing air handlers, 2 existing unit heaters, and 3 existing boiler pumps are being replaced in kind.

DCA REVIEW

This Drawing Is The Property Of DLB Associates Consulting Engineers, PC. It Was Prepared Exclusively For This Particular Project And Is Limited To This Project Only. Unauthorized Reproduction Or Other Use Of These Drawings Or Ideas Is Prohibited.

REV.	DATE	ISSUE DESCRIPTION	ITEM	DATE	ISSUE DESCRIPTION
A	6/23/23	ISSUE FOR BID AND DCA REVIEW			

24x36

dlbassociates consulting engineers
3600 Route 66, Suite 150 - #5981
Neptune NJ 07753
Questions For DLB Call: Dan Rehberg
DLB Project ID: 12636 Phone: 732-318-0314

project: NJDWSC WANAQUE SOUTH HVAC & LIGHTING REPLACEMENT 310 FAIRFIELD ROAD WAYNE, NJ 07470

title: PANEL SCHEDULES - 2

scale	drawn by	checked by	date	filename
AS SHOWN	DR	PE	06/09/2023	12636E105

dwg. no. E105

Confidential and Proprietary / ©DLB Associates 2023