CONTRACT #2127

NORTH JERSEY DISTRICT
WATER SUPPLY COMMISSION
One F.A. Orechio Drive
Wanaque, New Jersey 07465

Notice to Bidders,
Information for Bidders, Form of Bid,
Sample Contract, Technical Specifications attached as Exhibit A,
and Plans attached as Exhibit B
Access Approval Form
Confidentiality and Non-Disclosure Agreement
Disclosure of Investment Activities in Iran
Disabled Veteran-Owned Business Set-Aside Program

FILTER REHABILITATION PROJECT

Howard L. Burrell Chairman	)	Commissioners of the
Charles P. Shotmeyer Vice Chairman	)	
Alan S. Ashkinaze	)	**NORTH JERSEY DISTRICT** **WATER SUPPLY COMMISSION**
Donald C. Kuser	)	
James L. Casella	)	
Cristina M. Cutrone	)	
Terrence J. Duffy	)	

Prepared
FEBRUARY 2024

ALL DOCUMENTS CONTAINED HEREIN SHALL BE CONSIDERED PART OF THIS CONTRACT

CONTRACT #2127

TABLE OF CONTENTS

NOTICE TO BIDDERS ..... *Page N-1 – N-4*

INFORMATION FOR BIDDERS ..... *Page I-1 – I-17*

BID ..... *Page I-18 – I-21*

EXPERIENCE STATEMENT ..... *Page I-22*

EQUIPMENT STATEMENT ..... *Page I-23*

LISTING OF SUBCONTRACTORS ..... *Page I-24*

NONCOLLUSION STATEMENT ..... *Page I-25*

BIDDER DISCLOSURE STATEMENT ..... *Page I-26 – I-27*

SURETY'S CONSENT ..... *Page I-28*

ACKNOWLEDGEMENT OF RECEIPT OF CHANGES TO BID DOCUMENTS FORM ..... *Page I-29*

SAFETY TRAINING ACKNOWLEDGEMENT ..... *Page I-30*

SECURITY MEASURES ACKNOWLEDGEMENT ..... *Page I-31*

BID CHECKLIST ..... *Page I-32*

* * * * *

SAMPLE CONTRACT ..... *Page C-1 – C4*

GENERAL CONDITIONS ..... *Page C-3 – C-30*

EXECUTION OF CONTRACT ..... *Page C-31*

CERTIFICATE OF ACKNOWLEDGEMENT FOR CONTRACTOR (CORPORATION) ..... *Page C-32*

CERTIFICATE OF ACKNOWLEDGEMENT FOR CONTRACTOR (INDIVIDUAL) ..... *Page C-33*

CERTIFICATE OF ACKNOWLEDGEMENT FOR COMMISSION ..... *Page C-34*

* * * * *

CONTRACT #2127

TABLE OF CONTENTS

EXHIBITS:

EXHIBIT "A"……. TECHNICAL SPECIFICATIONS

EXHIBIT "B"…….. PLANS

ATTACHMENTS:

1. ***ACCESS APPROVAL FORM*** ***(Attachment #1)……..****Pages (1)*

2. ***NON-DISCLOSURE AGREEMENT*** ***(Attachment #2)……****Pages (5)*

3. ***IRAN INVESTMENT ACTIVITIES (Attachment #3)****……..Pages (3)*

4. ***DVOB Set Aside Requirements and forms (Attachment #4)***

NOTICE TO BIDDERS BEGINS ON THE NEXT PAGE

CONTRACT #2127

NOTICE TO BIDDERS

The **NORTH JERSEY DISTRICT WATER SUPPLY COMMISSION** (the "Commission") is soliciting bids from Contractors that have expertise in water treatment general construction. The work is part of an overall capital improvement plan located at the Commission's Water Treatment Facility in Wanaque, Passaic County, New Jersey.

The Scope of Work includes, but is not limited to, rehabilitation of the Commission's dual-media gravity filters including:

- Removal of existing media, gravel support, clay tile underdrains, air scour system and header, sand, anthracite, and valve actuators
- Cleaning and powerwashing filter interior surfaces and underdrains
- Concrete crack and spall repair, as needed
- Epoxy coating filter interior surfaces
- Installation of new underdrain, air header piping, filter media, and valve actuators
- Replacement of other filter appurtenances and miscellaneous tasks as per the drawings and Technical Specifications

The Successful Bidder shall be a contractor licensed in the State of New Jersey, shall have and provide demonstrable experience with specialized installation of similar water treatment plant gravity filtration systems. Respondents shall include references of at least five (5) projects completed of similar scope and magnitude, within the bids submitted to the Commission. In addition, the firm must own and maintain a local office within 100 miles of the Commission.

The project will be conducted under a single prime contract

Sealed bids must be received before **1:30 PM THURDAY, MARCH 7, 2024** by the **NORTH JERSEY DISTRICT WATER SUPPLY COMMISSION** in its offices at One F.A. Orechio Drive, Wanaque, New Jersey 07465, at which point they will be publicly opened and read for:

CONTRACT #2127 FILTER REHABILITATION PROJECT

Bid Specifications are obtainable beginning **MONDAY, FEBRUARY 5, 2024** through emailing Margaret M. Maddalena, the Commission's Contract Administrator, via email at mmaddalena@njdwsc.com. All bids must be made on the blank forms supplied by the Commission.

A **non-mandatory pre-bid meeting** will be held at the **ONE. F. A ORECHIO DRIVE, WANAQUE, NJ in the Filter Building Conference Room** at **10:00 a.m. on THURSDAY, FEBRUARY 15, 2024**. While attendance is not mandatory, all bidders are **strongly recommended** to attend this pre-bid meeting and site visit. Failure to attend the Pre-Bid meeting does not relieve the Bidder of any obligations or requirements. Bidder can be held to have knowledge that would have been gained if the Bidder attended the Pre-Bid Meeting.

CONTRACT #2127

NOTICE TO BIDDERS

For the convenience of the bidders, the Commission has annexed a draft Contract herein. Please be advised that the Contract annexed hereto is a draft only, and the Commission reserves the right to alter or amend the terms set forth therein prior to the awarding of the bid.

Sealed bids for performing the work described herein will be received by the Commission and a contract awarded in accordance with the requirements of the Commission. However, the Commission reserves the right to reject a bidder based upon a prior negative experience or upon any other grounds permitted by law.

Access Approval Forms should be submitted, via email to Security, with a copy of a photo ID, twenty-four (24) hours in advance of arrival on site. Please note, a new **Access Approval Form** must be submitted to Security for every visit to the Commission. **Access Approval Forms** may be found in (**Attachment #1**) of the Bid Package.

The Contractor will be required to sign a Confidentiality and Non-Disclosure Agreement (Attachment #2) at the time of the Contract award and it shall be incorporated as an Attachment into the final Contract.

The Commission and/or its employees do not express or imply any statements regarding existing conditions beyond what may be stated herein. Bidders are required to comply with the requirements of N.J.S.A. 10:5-31 et seq. and N.J.A.C. 17:27-1 et seq. and all other applicable statutes, laws or regulations concerning discrimination in employment of workers on public works projects. If awarded a contract your company/firm will be required to comply with requirements of N.J.S.A. 10:5-31 et seq. and N.J.A.C. 17:27-1 et seq.

Bidders are required to submit a valid Business Registration Certificate from the State of New Jersey, Department of Treasury, Division of Revenue with their bid. Failure to submit proof of registration prior to the award of a contract shall be cause for rejection of the bid without further consideration.

Sealed Bids: Each bid submission must be enclosed in a sealed envelope addressed to:

North Jersey District Water Supply Commission
One F.A. Orechio Drive
Wanaque, New Jersey 07465
Attention: Margaret Maddalena, Contract Administrator

The information below must be clearly shown on the outside envelope of all bids:

CONTENTS:	**SEALED PUBLIC BID**
BID NUMBER:	#**2127**
BID TITLE:	**FILTER REHABILITATION PROJECT**

CONTRACT #2127

NOTICE TO BIDDERS

BID TIME AND DATE: 1:30 P.M. – THURSDAY, MARCH 7, 2024

QUESTION CUT OFF DATE: MONDAY, FEBRUARY 19, 2024

BIDS FORWARDED VIA OVERNIGHT SERVICES SHALL INDICATE THAT A SEALED BID CONTAINED THEREIN AND IDENTIFY CONTRACT #2127, THE COMMISSION WILL NOT ACCEPT BIDS SUBMITTED VIA FAX OR EMAIL AND THE SAME WILL BE REJECTED.

The Commission will assume no responsibility for bids, which are not properly labeled, whether delivered by the bidder or the bidder's representative, or sent by mail or courier service. The Commission **will not** accept any bids submitted via fax or email. Bidders are advised not to call the Commission for information. All inquiries must be submitted via email to mmaddalena@njdwsc.com.

Bid Security: Each bid shall be accompanied by a certified check, cashier's check or bid bond for ten (10%) percent of the contract price (not to exceed $20,000) as a guarantee of execution of contract and the provision of performance security.

All bid securities, except the securities of the apparent three (3) lowest responsible bidders, will be, unless requested by the bidder, returned within ten (10) days after the opening of the bids (Saturdays, Sundays and holidays excepted). The bids of such bidders, other than the apparent three (3) lowest responsible bidders, shall then be considered officially withdrawn. Within three (3) days after the awarding of the Contract **and** the approval of the Contractor's Performance Bond (if required in the terms of this Contract), the bid securities of the remaining unsuccessful bidders shall be returned to them (Saturdays, Sundays and holidays excepted).

Surety's Consent: Every bid must be accompanied by the consent in writing of a surety company (or surety companies) qualified to do business in the State of New Jersey, who shall, at the time of submission of such bid, qualify as to its (or their) responsibility in an amount equal to ONE HUNDRED PERCENT (100%) of the contract price of such bid, and, furthermore, bind itself (or themselves) in such form as shall comply with the requirements of the Statutes of the State of New Jersey in respect to Bonds of Contractors on Public Works, N.J.S.A. 2A:44-143 to 2A:44-147, as amended and supplemented.

All bidders should use the Surety Consent Form provided by the Commission for the reasons stated on the bottom of the form.

New Jersey Prevailing Wage Act (N.J.S.A 34.11-56.25 et seq.): The Contractor is put on notice that it must pay all of its employees rendering service under this Contract in compliance with the prevailing wage rates promulgated by the New Jersey Department of Labor, a copy of which is on file at the Commission's Administrative Offices in Wanaque, New Jersey, and is hereby made a part of this Contract. In addition, the Contractor shall conform to all other labor laws and statutes established in this State.

CONTRACT #2127

NOTICE TO BIDDERS

Bid

All bidders are considered to have full knowledge of the conditions and requirements, including the physical characteristics of the site and the project, which are necessary for an accurate bid. The Commission assumes no responsibility with respect to ascertaining for the Bidder the facts of these physical characteristics, other than the facilitation of the Pre-Bid Meeting and Site Tour. The Bidder shall be held to be aware of the Commission's Requirements prior to the time of submitting bids and to have appraised all conditions under which the Contract is to be performed.

.

By order of the **NORTH JERSEY DISTRICT WATER SUPPLY COMMISSION**.

_____

DR. HOWARD L. BURRELL
Chairman

ATTEST: **KIM DIAMOND**
Commission Secretary

BID #2127

INFORMATION FOR BIDDERS

Note: The use of the masculine herein shall include the feminine, and the use of the plural shall include the singular, and vice versa.

Form to be Used: All bids must be made on the blank form "Bid" attached hereto and in accordance with the directions on the form.

Bid in Words and Figures: The price shall be printed in ink in both words and figures. Any bid which fails to name a price both in words and in figures per unit for each and every item, wherein quantities are given, may be held to be non-responsive and may be rejected. In case of any discrepancy or conflict, the price written in words will take precedence over the price written in figures, unit prices will take precedence over price extension, and the sum of individual items, including unit prices multiplied by estimated quantities, and/or individual lump sum and/or allowance amounts will take precedence over the total bid price or alternate bid price.

Bids Not to be Withdrawn: No bid will be permitted to be withdrawn for any reason whatsoever after it has been submitted (except as permitted by N.J.S.A. 40A:11-23.3).

Sealed Bids: Each bid submission must be enclosed in a sealed envelope addressed to:

North Jersey District Water Supply Commission
One F.A. Orechio Drive
Wanaque, New Jersey 07465
Attention: Margaret Maddalena, Contract Administrator

The information below must be clearly shown on the outside envelope of all bids:

CONTENTS - SEALED PUBLIC BID

BID NUMBER: #2127

BID TITLE: FILTER REHABILITATION PROJECT

BID TIME AND DATE: 1:30 P.M. on THURSDAY, MARCH 7, 2024

QUESTION CUT OFF DATE: MONDAY, FEBRUARY 19, 2024

BIDS FORWARDED VIA OVERNIGHT SERVICES SHALL INDICATE THAT A SEALED BID IS CONTAINED THEREIN.

CONTRACT #2127

INFORMATION FOR BIDDERS

The Commission will assume no responsibility for bids, which are not properly labeled, whether delivered by the bidder or the bidder's representative or if sent by mail or courier service. The Commission will not accept any bids submitted via fax or email. Bidders are also advised not to call the Commission for information. All inquiries must be submitted via email to Margaret M. Maddalena at mmaddalena@njdwsc.com.

Bid Security:

Each bid shall be accompanied by a certified check, cashier's check or bid bond for ten (10%) percent of the contract price (not to exceed $20,000), as a guarantee of execution of contract and the provision of performance security.

All bid securities, except the securities of the apparent three (3) lowest responsible bidders will be, unless requested by the bidder, returned within ten (10) days after the opening of the bids (Saturdays, Sundays and holidays excepted). The bids of such bidders, other than the apparent three (3) lowest responsible bidders, shall then be considered officially withdrawn. Within three (3) days after the awarding of the contract **and** the approval of the Contractor's Performance Bond (if required in the terms of this Contract), the bid securities of the remaining unsuccessful bidders shall be returned to them (Saturdays, Sundays and holidays excepted).

Default:

In the case of winning bidder's default, the Commission shall apply said bidder's bid security to the expenses incurred by the Commission in (i) rebidding the Contract and (ii) payment of any difference between the bid price and the price the Commission may be required to pay upon awarding this Contract to a subsequent bidder.

Surety's Consent:

Every bid must be accompanied by the consent in writing of a surety company (or surety companies) qualified to do business in the State of New Jersey, who shall, at the time of submission of such bid, qualify as to its (or their) responsibility in the amount of such bid, and, furthermore, bind itself (or themselves) in such form as shall comply with the requirements of the Statutes of the State of New Jersey in respect to Bonds of Contractors on Public Works, N.J.S.A. 2A:44-143 to 2A:44-147, as amended and supplemented, as follows:

> That upon the awarding of the said Contract to the person (or persons) making the bid, the said surety company (or surety companies) shall become surety, firstly, for the faithful performance of the said work, and secondly, for the protection of all persons performing labor, or furnishing labor or materials. Therefore, as required by law, said performance bond is to be in an amount equal to **ONE HUNDRED PERCENT (100%)** of the contract price.

All bidders should use the Surety Consent Form provided by the Commission for the reasons stated on the bottom of the form.

CONTRACT #2127

INFORMATION FOR BIDDERS

Payment and Performance Bond:

The Contractor to whom the Contract is awarded shall give a bond for **ONE HUNDRED PERCENT (100%)** of the Contract price in satisfactory legal form of a surety company or companies authorized to do business by and operating in accordance with the laws of the State of New Jersey, and to be approved by the Commission for the faithful performance of all provisions of the contract relating to work included in these specifications, including the safeguarding against infringement of any or all patents; and said bond to be canceled upon the performance of the conditions therein specified and upon the payment for final delivery of material under these specifications. In addition this bond shall protect all persons furnishing materials or labor to the Contractor or any subcontractors for the completion of said Contract in accordance with the laws of the State of New Jersey, and shall be in such legal form as shall satisfy the requirements of N.J.S.A. 2A:44-143 to 2A:44-147, and amendments and supplements thereto, and shall not be canceled and returned until such time as the Commission determines that all liability to any and all persons protected by the condition of said bond has been met by the Contractor or person primarily liable for the payment thereof, or by the surety (or sureties) on said bond.

Corporate Acknowledgment:

In the event that a bidder is a corporation in which all offices are held by a ***single individual***, then any documents or instruments presented to the Commission in connection with bid shall be executed by said individual only as executive officer, and said officer's signature shall be authenticated and witnessed by a Notary Public licensed to act in such capacity under the laws of the State of New Jersey. This requirement shall apply only to those corporations satisfying the "single individual" criteria set forth above.

Compliance with All Laws:

The successful bidder will be required to keep itself informed and to comply with all Federal, State, County and Local laws, ordinances, and regulations as such may apply.

Non-Collusion:

Bidders are required to give their names together with the address of their places of business. If a bidder is a corporate entity, then any affidavit submitted in conjunction with a bid for this Contract must be signed by a corporate officer. If the Commission discovers that a person or persons submitting a bid is interested, in any manner, in any other bid for the same piece of work, both bids shall be deemed nonconforming and shall be immediately rejected. This provision shall not prevent a party from quoting prices on materials or equipment to more than one bidder. Every bid to be conforming must be in all respects fair and without collusion or fraud and Bidders shall expressly represent that the Bidder is the only person interested in said bid; that it is made without any connection with any person submitting another bid for the same Contract; that the bid is in all respects fair and without collusion, fraud or mental reservation; that no official of the Commission or any person in the employ of the Commission is directly or indirectly interested in said bid or in the supplies or work to which it relates, or in any portion of the profits thereof.

CONTRACT #2127

INFORMATION FOR BIDDERS

Bidders will be required to submit a fully executed Affidavit of Non-Collusion as part of the bid submission.

Balanced Bidding:

Any bid which, in the opinion of the Commission, is unbalanced, may be rejected in the sole discretion of the Commission.

Authorized to Reject Bids:

The Commission reserves the right to abandon the bid process or reject all bids and re-advertise and award the Contract in the regular manner if, in its judgment, such action will best serve the interest of the Commission.

The Commission reserves the right to reject any or all bids which may be non-responsive or the acceptance of which, in the sole judgment of the Commission, may be detrimental to its interests.

The Commission also reserves the right to reject a bidder based upon a prior negative experience or upon any other grounds permitted by law.

Time within which Contract is to be Executed:

The successful bidder shall execute this Contract and give to the Commission the required security within seven (7) working days from the date that the said contract has been awarded to him. Upon failure to do so, said bidder will be considered as having abandoned this Contract.

Buy American Acts:

Any successful bidder and his subcontractors, if any, must comply with all "Buy American" statutes or regulations, including N.J.S.A. 52:33-1 et seq.

The Commission reserves the right to accept non-domestic materials under this Contract in accordance with N.J.S.A. 52:33-2 and 52:33-3 in the event: (i) it determines the use of domestic materials is "impractical" or "inconsistent with the public interest"; (ii) it determines that the cost of using domestic materials is "unreasonable"; or (iii) domestic materials of the class or kind sought are not mined, produced, or manufactured, as the case may be, in the United States in commercial quantities and of a quality satisfactory to the Commission.

Brand Name or Equivalent:

Wherever a brand name is designated in the bid documents, it shall mean “brand name or equivalent.” Bidders will be required to demonstrate, to the sole satisfaction of the Commission, that equivalent products are both compatible and effective.

CONTRACT #2127

INFORMATION FOR BIDDERS

Award of Contract:

The Contract will be awarded to the lowest responsible and responsive bidder, who, in the judgment of the Commission, is qualified to do the work. The Commission reserves the right to reject any and all bids, and to waive minor or non-material bid defects.

Worker and Community Right-to-Know Act (N.J.S.A. 34:5A-1 et seq.; N.J.A.C. 7:1G):

This Act requires employers to label all containers of hazardous substances. All goods offered for purchase to the Commission must be labeled in compliance with the provisions of this Act.

Material Safety Data Sheets also must be supplied as is required by law.

Bidder's Qualifications:

Only those bidders who are licensed contractor in the State of New Jersey and thoroughly experienced in quality work of the type required herein with at least 5 years' experience in paving/resurfacing as it pertains to roadway systems and parking areas. working on large industrial projects, hospitals, or schools installing/rehabilitating boilers and/or boiler replacement and HVAC systems may apply.

Bidders are put on notice that their previous experience and performance record will be carefully considered prior to award of contract. Bidders must also own and maintain a local office within one hundred (100) miles of the Commission.

Interpretations and Addenda:

No interpretations of the meanings of any portion of the bid documents will be made to any prospective bidder orally. Every request for an interpretation or correction shall be made in writing addressed to **MARGARET M. MADDALENA, CONTRACT ADMINISTRATOR, NORTH JERSEY DISTRICT WATER SUPPLY COMMISSION** and submitted via email to mmaddalena@njdwsc.com. **Requests for interpretations received later than MONDAY, FEBRUARY 19, 2024 will be considered untimely, and, at the sole discretion of the Commission, will not be considered.** Notice of corrections and any supplemental instructions in the form of written addenda to the bid documents will be published in a legal newspaper, faxed and/or mailed to bidders at their respective addresses furnished for such purposes, certified, not later than seven (7) days (Saturdays, Sundays and Holidays excepted) prior to the date fixed for the opening of bids. The failure of any bidder to receive any such addenda or interpretations shall not release said bidder from any obligations under his bid as submitted.

All addenda so issued shall become part of the bid documents. Only the written interpretations, corrections, and addenda so given by **MARGARET M. MADDALENA,** shall be binding, and the prospective bidders are warned that no other officer, agent or employee of the Commission is authorized to give information concerning, or to explain or interpret, the bid documents.

CONTRACT #2127

INFORMATION FOR BIDDERS

Each bidder is required to submit with its bid a completed ***"Acknowledgment of Receipt of Changes to Bid Documents Form"*** **(Page I-29)**, included with these bid specifications. In the event no notices, revisions, or addenda to the bid advertisement, or bid documents are received by the bidder, the bidder shall indicate ***"none"*** on that form, which must still be completed, acknowledged, signed and submitted with its bid.

Affirmative Action:

Bidders are required to comply with the requirements of N.J.S.A. 10:5-31 et seq. (P.L. 1975, c.127) and N.J.A.C. 17:27-1.1 et seq. Construction Contracts.

After notification of award, but prior to signing a construction contract, the contractor shall submit to the Commission's compliance officer and the Dept. of LWD, Construction EEO Monitoring Program an initial project workforce report (Form AA-201) electronically provided to the public agency by the Dept. of LWD, Construction EEO Monitoring Program, through its website, for distribution to and completion by the contractor, in accordance with N.J.A.C. 17:27-7. The contractor also agrees to submit a copy of the Monthly Project Workforce Report once a month thereafter for the duration of this contract to the Dept. of LWD, Construction EEO Monitoring Program, and to the Commission's compliance officer.

During the performance of this contract, the contractor agrees as follows:

The contractor or subcontractor, where applicable, will not discriminate against any employee or applicant for employment because of age, race, creed, color, national origin, ancestry, marital status, affectional or sexual orientation, gender identity or expression, disability, nationality or sex. Except with respect to affectional or sexual orientation and gender identity or expression, the contractor will ensure that equal employment opportunity is afforded to such applicants in recruitment and employment, and that employees are treated during employment, without regard to their age, race, creed, color, national origin, ancestry, marital status, affectional or sexual orientation, gender identity or expression, disability, nationality or sex. Such equal employment opportunity shall include, but not be limited to the following: employment, upgrading, demotion, or transfer; recruitment or recruitment advertising; layoff or termination; rates of pay or other forms of compensation; and selection for training, including apprenticeship. The contractor agrees to post in conspicuous places, available to employees and applicants for employment, notices to be provided by the Public Agency Compliance Officer setting forth provisions of this nondiscrimination clause.

The contractor or subcontractor, where applicable will, in all solicitations or advertisements for employees placed by or on behalf of the contractor, state that all qualified applicants will receive consideration for employment without regard to age, race, creed, color, national origin, ancestry, marital status, affectional or sexual orientation, gender identity or expression, disability, nationality or sex.

The contractor or subcontractor will send to each labor union, with which it has a collective bargaining agreement, a notice, to be provided by the agency contracting officer, advising the labor union or workers' representative of the contractor's commitments under this act and shall post copies of the notice in conspicuous places available to employees and applicants for employment.

CONTRACT #2127

INFORMATION FOR BIDDERS

The contractor or subcontractor, where applicable, agrees to comply with any regulations promulgated by the Treasurer, pursuant to N.J.S.A. 10:5-31 et seq., as amended and supplemented from time to time and the Americans with Disabilities Act.

When hiring or scheduling workers in each construction trade, the contractor or subcontractor agrees to make good faith efforts to employ minority and women workers in each construction trade consistent with the targeted employment goal prescribed by N.J.A.C. l7:27-7.2; provided, however, that the Dept. of LWD, Construction EEO Monitoring Program, may, in its discretion, exempt a contractor or subcontractor from compliance with the good faith procedures prescribed by the following provisions, A, B, and C, as long as the Dept. of LWD, Construction EEO Monitoring Program is satisfied that the contractor or subcontractor is employing workers provided by a union which provides evidence, in accordance with standards prescribed by the Dept. of LWD, Construction EEO Monitoring Program, that its percentage of active "card carrying" members who are minority and women workers is equal to or greater than the targeted employment goal established in accordance with N.J.A.C. **17:27-7.2.**

The contractor or subcontractor agrees that a good faith effort shall include compliance with the following procedures:

(A) If the contractor or subcontractor has a referral agreement or arrangement with a union for a construction trade, the contractor or subcontractor shall, within three business days of the contract award, seek assurances from the union that it will cooperate with the contractor or subcontractor as it fulfills its affirmative action obligations under this contract and in accordance with the rules promulgated by the Treasurer pursuant to N.J.S.A. 10:5-31 et. seq., as supplemented and amended from time to time and the Americans with Disabilities Act. If the contractor or subcontractor is unable to obtain said assurances from the construction trade union at least five business days prior to the commencement of construction work, the contractor or subcontractor agrees to afford equal employment opportunities minority and women workers directly, consistent with this chapter. If the contractor's or subcontractor's prior experience with a construction trade union, regardless of whether the union has provided said assurances, indicates a significant possibility that the trade union will not refer sufficient minority and women workers consistent with affording equal employment opportunities as specified in this chapter, the contractor or subcontractor agrees to be prepared to provide such opportunities to minority and women workers directly, consistent with this chapter, by complying with the hiring or scheduling procedures prescribed under (B) below; and the contractor or subcontractor further agrees to take said action immediately if it determines that the union is not referring minority and women workers consistent with the equal employment opportunity goals set forth in this chapter.

(B) If good faith efforts to meet targeted employment goals have not or cannot be met for each construction trade by adhering to the procedures of (A) above, or if the contractor does not have a referral agreement or arrangement with a union for a construction trade, the contractor or subcontractor agrees to take the following actions:

(1) To notify the public agency compliance officer, the Dept. of LWD, Construction EEO Monitoring Program, and minority and women referral organizations listed by the Division pursuant to N.J.A.C. 17:27-5.3, of its workforce needs, and request referral of minority and women workers;

(2) To notify any minority and women workers who have been listed with it as awaiting available vacancies;

(3) Prior to commencement of work, to request that the local construction trade union refer minority and women workers to fill job openings, provided the contractor or subcontractor has a referral agreement or arrangement with a union for the construction trade;

(4) To leave standing requests for additional referral to minority and women workers with the local construction trade union, provided the contractor or subcontractor has a referral agreement or arrangement with a union for the construction trade, the State Training and Employment Service and other approved referral sources in the area;

(5) If it is necessary to lay off some of the workers in a given trade on the construction site, layoffs shall be conducted in compliance with the equal employment opportunity and nondiscrimination standards set forth in this regulation, as well as with applicable Federal and State court decisions;

(6) To adhere to the following procedure when minority and women workers apply or are referred to the contractor or subcontractor:

(i) The contactor or subcontractor shall interview the referred minority or women worker. If said individuals have never previously received any document or certification signifying a level of qualification lower than that required in order to perform the work of the construction trade, the contractor or subcontractor shall in good faith determine the qualifications of such individuals. The contractor or subcontractor shall hire or schedule those individuals who satisfy appropriate qualification standards in conformity with the equal employment opportunity and non-discrimination principles set forth in this chapter. However, a contractor or subcontractor shall determine that the individual at least possesses the requisite skills, and experience recognized by a union, apprentice program or a referral agency, provided the referral agency is acceptable to the Dept. of LWD, Construction EEO Monitoring Program. If necessary, the contractor or subcontractor shall hire or schedule minority and women workers who qualify as trainees pursuant to these rules. All of the requirements, however, are limited by the provisions of (C) below.

(ii) The name of any interested women or minority individual shall be maintained on a waiting list, and shall be considered for employment as described in (i) above, whenever vacancies occur. At the request of the Dept. of LWD, Construction EEO Monitoring Program, the contractor or subcontractor shall provide evidence of its good faith efforts to employ women and minorities from the list to fill vacancies.

(iii) If, for any reason, said contractor or subcontractor determines that a minority individual or a woman is not qualified or if the individual qualifies as an advanced trainee or apprentice, the contractor or subcontractor shall

inform the individual in writing of the reasons for the determination, maintain a copy of the determination in its files, and send a copy to the public agency compliance officer and to the Dept. of LWD, Construction EEO Monitoring Program.

(7) To keep a complete and accurate record of all requests made for the referral of workers in any trade covered by the contract, on forms made available by the Dept. of LWD, Construction EEO Monitoring Program and submitted promptly to the Dept. of LWD, Construction EEO Monitoring Program upon request.

(C) The contractor or subcontractor agrees that nothing contained in (B) above shall preclude the contractor or subcontractor from complying with the union hiring hall or apprenticeship policies in any applicable collective bargaining agreement or union hiring hall arrangement, and, where required by custom or agreement, it shall send journeymen and trainees to the union for referral, or to the apprenticeship program for admission, pursuant to such agreement or arrangement. However, where the practices of a union or apprenticeship program will result in the exclusion of minorities and women or the failure to refer minorities and women consistent with the targeted county employment goal, the contractor or subcontractor shall consider for employment persons referred pursuant to (B) above without regard to such agreement or arrangement; provided further, however, that the contractor or subcontractor shall not be required to employ women and minority advanced trainees and trainees in numbers which result in the employment of advanced trainees and trainees as a percentage of the total workforce for the construction trade, which percentage significantly exceeds the apprentice to journey worker ratio specified in the applicable collective bargaining agreement, or in the absence of a collective bargaining agreement, exceeds the ratio established by practice in the area for said construction trade. Also, the contractor or subcontractor agrees that, in implementing the procedures of (B) above, it shall, where applicable, employ minority and women workers residing within the geographical jurisdiction of the union.

After notification of award, but prior to signing a construction contract, the contractor shall submit to the public agency compliance officer and the Dept. of LWD, Construction EEO Monitoring Program an initial project workforce report (Form AA-201) electronically provided to the public agency by the Dept. of LWD, Construction EEO Monitoring Program, through its website, for distribution to and completion by the contractor, in accordance with N.J.A.C. 17:27-7. The contractor also agrees to submit a copy of the Monthly Project Workforce Report once a month thereafter for the duration of this contract to the Dept. of LWD, Construction EEO Monitoring Program, and to the public agency compliance officer.

The contractor agrees to cooperate with the public agency in the payment of budgeted funds, as is necessary, for on-the-job and/or off-the job programs for outreach and training of minorities and women.

(D) The contractor and its subcontractors shall furnish such reports or other documents

to the Dept. of LWD, Construction EEO Monitoring Program as may be requested by the Dept. of LWD, Construction EEO Monitoring Program from time to time in order to carry out the purposes of these regulations, and public agencies shall furnish such information as may be requested by the Dept. of LWD, Construction EEO Monitoring Program for conducting a compliance investigation pursuant to N.J.A.C. 17:27-1.1 et seq.

Patent Infringement:

No specification or specifications provided to the Contractor shall constitute a warranty, express or implied, against any claims for infringement for patents, copyrights, or trademarks and the Commission shall not be responsible to the Contractor, as indemnitor or otherwise, for or on account of any such claim or liability.

Contractor guarantees that the sale or use of its products will not infringe any United States or foreign patent, copyright, or trademark, and Contractor shall indemnify the Commission against all judgments, decrees, costs and expenses resulting from such alleged infringement, and covenants that Contractor will upon request of the Commission and at the Contractor's own expense, defend, or assist in the defense of, any suit or action which may be brought against the Commission or those selling or using any product or service of the Commission by reason of any alleged infringement of any patents, copyrights, or trademarks in the sale or use of the Commission's products of services.

Working Hours:

Contractor shall be permitted to perform work on Commission property during the hours of 7:00a.m. to 4:30 p.m., Monday through Friday, non-holiday periods.

Time for Completing Work:

The Contractor shall commence the work within seven (7) days from the issuance of the Notice to Proceed by the Commission. The Contractor shall achieve Substantial Completion within = 240 + (Number of filters awarded –1)*90. By way of example only, if four filters are awarded, then 240 + (4-1)*90 = 510 days for full completion of the project from the day of Notice to Proceed**.**

Liquidated Damages:

If the Contractor shall not complete the work within the time herein specified, or any proper extension thereof granted by the Commission, then the Contractor does hereby agree, as part consideration for the awarding of this Contract, to pay the Commission ***TWO HUNDRED FIFTY ($250.00) per day after the Substantial Completion Deadline.*** Liquidated damages shall be in accordance with the Liquidated Damages Schedule as set forth in Section 011216-1 of the Technical Specifications, for such breach of contract as hereinafter set forth, for each and every calendar day that the Contractor shall be in default after the time stipulated in the Bid Specifications for completing the work.

The Commission may, in its sole discretion, review any purported reasons for delay and

consider an extension or change order pursuant to the terms of Contract. The Commission shall have the right to offset from monies owed the Contractor under this Contract any and all monies owed the Commission as Liquidated Damages.

Political Contributions

On April 3, 2023, Governor Murphy signed the Elections Transparency Act (ETA), N.J.S.A 19:44A-20.13 to 20.25 into law. He subsequently issued Executive Order (EO) 333 which amended prior Eos to align with the newly-enacted ETA. Contractor shall comply with the ETA disclosure requirements.

Business Registration Act:

A. Business Registration: Pursuant to N.J.S.A. 52:32-44, **NORTH JERSEY DISTRICT WATER SUPPLY COMMISSION** is prohibited from entering into a contract with an entity unless the bid/proposal/contractor, and each subcontractor that is required by law to be named in a bid/proposal/contract has a valid Business Registration Certificate on file with the Division of Revenue and Enterprise Services within the Department of Treasury.

B. Prior to contract award or authorization, the contractor shall provide the Commission with its proof of business registration and that of any named subcontractor(s).

C. Subcontractors named in a bid or other proposal shall provide proof of business registration to the bidder, who in turn, shall provide it to the Commission prior to the time a contract, purchase order or other contracting documents is awarded or authorized.

D. During the course of contract performance:

(1) the contractor shall not enter into a contract with a subcontractor unless the subcontractor first provides the contractor with a valid proof of business registration.

(2) the contractor shall maintain and submit to the Commission a list of subcontractors and their addresses that may be updated from time to time.

(3) the contractor and any subcontractors providing goods or performing services under a contract, and each affiliates, shall collect and remit to the Director of Division of Taxation in the Department of Treasury, the use tax due pursuant to the Sales and Use Tax Act, (N.J.S.A. 54:32B-1 et.seq.) on all sales of tangible personal property delivered to the State. Any questions in this regard can be directed to the Division of Taxation at (609)2925-6200. Form NJ-REG can be filled out at

www.state.nj.us/treasury/revenue/busregcert.html.

E. Before final payment is made under the contract, the contractor shall submit to the Commission a complete list of all subcontractors and their addresses.

F. Pursuant to N.J.S.A. 54:49-4.1, a business organization that fails to provide a copy of a business registration as required, or that provides false business registration information, shall be liable for a penalty of $25 for each day of violation, not to exceed $50,000, for each proof of business registration not properly provided under a contract with a contract agency.

Public Works Contractor Registration Act*:*

N.J.S.A. 34:11-56.48 et seq., requires that a general or prime contractor and any listed subcontractors named in the contractor's bid proposal shall possess a certificate at the time the bid proposal is submitted. After bid proposal are received and prior to award of contract, the successful contractor shall submit a copy of the contractor's certification along with those of all listed subcontractors. All non-listed subcontractors and lower tier subcontractors shall be registered prior to starting work on the project. It is the general contractor's responsibility that all non-listed subcontractors at any tier have their certificate prior to starting work on the job.

Under the law a "contractor" is "a person, partnership, association, joint stock company, trust, corporation or other legal business entity or successor thereof who enters into a contract" which is subject to the provisions of the New Jersey Prevailing Wage Act (N.J.S.A. 34:11-56.25, et seq.) It applies to contractors based in New Jersey or any other state.

To register, a contractor must provide the State Department of Labor with a full and accurately completed application form. The form is available online at www.state.nj.us/labor/lsse/lspubcon.html. N.J.S.A. 34:11-56.55 specifically prohibits accepting applications for registration as a substitute for a certificate of registration.

New Jersey Anti-Discrimination

Pursuant to N.J.S.A. 10:2-1, if awarded a contract, the contractor agrees that:

a. In the hiring of persons for the performance of work under this contract or any subcontract hereunder, or for the procurement, manufacture, assembling or furnishing of any such material, equipment, supplies or services to be acquired under this contract, no contractor, nor any person acting on behalf of such contractor or subcontractor , shall, by reason of race, creed, color, national origin, ancestry, marital status, gender identity or expression, affectional or sexual orientation or sex, discriminate against any person who is qualified and available to perform the work to

which the employment relates;

b. No contractor, subcontractor, nor any person on his behalf, shall in any manner, discriminate against or intimidate any employee engaged in the performance of work under this contract or any subcontract hereunder, or engage in the procurement, manufacture, assembling or furnishing of any such materials, equipment, supplies or services to be acquired under such contract, on account or race, creed, color, national origin, ancestry, marital status, gender identity or expression, affectional or sexual orientation or sex;

c. There may be deducted from the amount payable to the contractor by the contracting public agency, under this contract, a penalty of $50.00 for each person for each calendar day which such a person is discriminated against or intimidated in violation of the provisions of the contract; and

d. This contract may be canceled or terminated by the contracting public agency, and all money due to become due hereunder may be forfeited, for any violation of this section of the contract occurring after notice to the contractor from the public agency of any prior violation of this section of the contract.

American with Disabilities Act 1990

The contractor and the owner do hereby agree that the provisions of Title 11 of the Americans with Disabilities Act of 1990 (the "Act") *(42 U.S.C. S121 01 et seq.),* which prohibits discrimination on the basis of disability by public entities in all services, programs, and activities provided or made available by public entities, and the rules and regulations promulgated pursuant there unto, are made part of this contract. In providing any aid, benefit, or service on behalf of the owner pursuant to this contract, the contractor agrees that the performance shall be in strict compliance with the act. In the event that the contractor, its agents, servants, employees, subcontractors violate or are alleged to have violated the act during the performance of this contract, the contactor shall defend the owner in any action or administrative proceeding commenced pursuant to the act. The contractor shall indemnify, protect, and save harmless the owner, it agents, servants, and employees from and against any and all suits, claims, losses, demands, or damages, of whatever kind of nature arising out of or claimed to arise out of the alleged violation. The contractor shall, at its own expense, appear, defend, and pay any and all charges for legal services and any and all costs and other expenses arising from such action or administrative proceeding or in connection therewith. In any and all complaints brought pursuant to the owner's grievance procedure, the contractor agrees to abide by any decision of the owner which is rendered pursuant to said grievance procedure. If any action or administrative proceeding results in an award of damages against the owner, or if the owners incurs any expense to cure a violation of the ADA which has been brought pursuant to its grievance procedure, the

contractor shall satisfy and discharge the same at its own expense.

The owner shall, as soon as practicable after a claim has been made against it, give written notice thereof to the contractor along with full and complete particulars of the claim, if any action or administrative proceeding is brought against the owner or any of its agents, servants, employees, the owner shall expeditiously forward to the contractor every demand, complaint, notice, summons, pleading, or other process received by the owner or its representatives.

It is expressly agreed and understood that any approval by the owner of the services provided by the contactor pursuant to this contract will not relieve the contractor of the obligation to comply with the Act and to defend, indemnify, protect, and save harmless to the pursuant to this paragraph.

It is further agreed and understood that the owner assumes no obligation to indemnify or save harmless the contractor, its agents, servants, employees and subcontractors for any claim which may arise out of their performance of this Agreement. Furthermore, the contractor expressly understands and agrees that the provisions of this indemnification clause shall in no way limit the contractor's obligations assumed in this Agreement, nor shall they be construed to relieve the contractor from any liability, nor preclude the owner from taking any actions available to it under any other provisions of the Agreement or otherwise at Law.

Disclosure of Investment Activities in Iran:

Pursuant to Public Law 2012, c. 25, any person or entity that submits a bid or proposal or otherwise proposes to enter into or renew a contract must complete the certification below to attest, under penalty of perjury, that neither the person or entity, nor any of its parents, subsidiaries, or affiliates, is identified on the Department of Treasury's Chapter 25 list as a person or entity engaging in investment activities in Iran. The Chapter 25 list is found on the Division's website at:

http://www.state.nj.us/treasury/purchase/pdf/Chapter25List.pdf.

Bidders must review this list prior to completing the below certification. Failure to complete the certification will render a bidder's proposal non-responsive. If the Director finds a person or entity to be in violation of law, s/he shall take action as may be appropriate and provided by law, rule or contract, including but not limited to, imposing sanctions, seeking compliance, recovering damages, declaring the party in default and seeking debarment or suspension of the party.

Diane B. Allen Equal Pay Act

Pursuant to N.J.S.A. 34:11-56.14, a contractor performing "qualifying services" or "public work" to the State or any agency or instrumentality of the State shall provide the

Commissioner of Labor and Workforce Development a report regarding the compensation and hours worked by employees categorized by gender, race, ethnicity, and job category. For more information and report templates see https://nj.gov/labor/equalpay/equalpay.html.

Disabled Veteran-Owned Business Set-Aside

It is the policy of the Commission that Disabled Veteran-Owned Business (DVOBs), as determined and defined by the State of New Jersey, Department of the Treasury, Division of Revenue and Enterprise Services ("Division") in N.J.A.C. 17:14-1.1 et seq., have the opportunity to compete for and participate in the performance of contracts and subcontracts for services in accordance with the New Jersey Set-Aside Act for Disabled Veteran's Businesses, N.J.S.A. 52:32-31.1 et seq. (P.L. 2015, c. 116). The Commission further requires that its contractors shall agree to take all necessary and responsible steps, in accordance with the aforementioned regulations, to ensure that DVOBs have these opportunities.

This language is included to ensure that all persons who enter into any form of contractual agreement with the Commission, are aware of their responsibilities and the commitment of the Commission to see that its Disabled Veteran-Owned Business Set-Aside Program ("Program") is carried out in all instances.

The Contractor agrees to make a good faith effort to award at least 3% of this Contract to Subcontractors registered by the Division as a DVOB firm. Subcontracting goals do not apply if the prime Contractor is a registered DVOB firm.

The following actions shall be taken by a bidder in establishing a good faith effort to solicit and award subcontracts to eligible disabled veteran-owned businesses, as established in the RFB or RFP:

1) The bidder shall attempt to locate qualified potential disabled veteran-owned business subcontractors;

2) The bidder shall consult the disabled veteran business database if none are known to the bidder;

3) The bidder shall keep a record of its efforts, including the names of businesses contacted and the means and results of such contacts, as well as documentation on any good faith efforts to solicit and award any subcontract to an eligible disabled veteran-owned business; and

4) The bidder shall provide all potential subcontractors with detailed information regarding the specifications.

Bidders and responders shall in all respects comply with the requirements of Attachment 5 governing the DVOB Program.

Prompt Payment of Construction Contracts Act:

CONTRACT #2127

INFORMATION FOR BIDDERS

On September 1, 2006, the New Jersey Legislature passed the Prompt Payment of Construction Contracts Act, N.J.S.A. 2A:30A-1 et seq.

N.J.S.A. 2A:30A-1 et seq. provides, in part, as follows: "If a prime contractor has performed in accordance with the provisions of a contract with the owner and the billing for the work has been approved and certified by the owner or the owner's authorized approving agent, the owner shall pay the amount due to the prime contractor for each periodic payment, final payment or retainage monies not more than thirty (30) calendar days after the billing date, which for a periodic billing, shall be the periodic billing date specified in the contract. The billing shall be deemed approved and certified twenty (20) days after the owner receives it unless the owner provides, before the end of the 20-day period, a written statement of the amount withheld and the reason for withholding payment, except that in the case of a public or governmental entity that requires the entity's governing body to vote on authorizations for each periodic payment, final payment or retainage monies, the amount due may be approved and certified at the next scheduled public meeting of the entity's governing body, and paid during the entity's subsequent payment cycle, provided this exception has been defined in the bid specifications and contract documents."

As a public entity that requires the authorization of its governing body for periodic or final payments, and payments for change orders or release of retainage, the Commission hereby places the prime contractor on notice that it not subject to the twenty (20) day period for the approval and certification of billings and, consistent with N.J.S.A. 2A:30A-1 et seq., in the event that the Commission is unable to obtain formal consideration and approval of any billing for work performed by a prime contractor as the basis for a periodic or final payment, or payments for change orders or retainage within the thirty (30) day time period mandated by N.J.S.A. 2A:30A-1 et seq., the Commission shall place the billing for work performed on its next regularly scheduled meeting of its Board of Commissioners and, should such billing for work performed be approved, pay the approved amount to the prime contractor during the Commission's subsequent payment cycle.

New Jersey Prevailing Wage Act (N.J.S.A 34.11-56.25 et seq.): Contractors on projects for public work shall adhere to all requirements of the New Jersey Prevailing Wage Act. The contractor shall be required to submit a certified payroll record to the Commission within (10) days of the payment of wages. In the event that is found that any worker, employed by the contractor or any subcontractor has been paid a rate of wages less than the prevailing wage required to be paid, the Commission may terminate the contractor's or subcontractor's right to proceed with work, or such part of work as to which there has been a failure to pay required wages and prosecute the work to completion.

The contractor is also responsible for obtaining and submitting all subcontractors' certified payroll records within the aforementioned time period. The contractor shall submit said certified payrolls in the form set forth in N.J.A.C 12:60-6.1(c). It is the contractor's responsibility to obtain any additional copies of the certified payroll for to be submitted by contacting the New Jersey Department of Labor and Workforce Development, Division of

Workplace Standards. Additional information is available at http:lwd.dol.state.nj.us/labor/wagehour/wagerate/pwr_construction.html.

The Contractor is put on notice that it must pay all of its employees rendering service under this Contract in compliance with the prevailing wage rates promulgated by the New Jersey Department of Labor, a copy of which is on file at the Commission's Administrative Offices in Wanaque, New Jersey, and is hereby made a part of this Contract. In addition, the Contractor shall conform to all other labor laws and statutes established in this State.

Bid

All bidders are considered to have full knowledge of the conditions and requirements, including the physical characteristics of the site and the project, which are necessary for an accurate bid. The Commission assumes no responsibility with respect to ascertaining for the Bidder the facts of these physical characteristics, other than the facilitation of the Pre-Bid Meeting and site tour. The Bidder shall be held to be aware of the Commission's requirements prior to the time of submitting bids and to have appraised all conditions under which the Contract is to be performed.

TO: THE NORTH JERSEY DISTRICT WATER SUPPLY COMMISSION

FOR: CONTRACT #2127 FILTER REHABILITATION PROJECT

MADE THIS_____DAY OF_____ 2024

BY: _____

ADDRESS: _____

Bidder's Declaration: The party above named, as bidder, declares that the only person or persons interested in this bid as principal or principals is or are named above, and that no other person than hereinabove named has any interest in this Bid or in the Contract proposed to be taken; that this Bid is made without any connection with any other person or persons making a Bid for the same purposes; that the bid is in all respects fair and without collusion or fraud and that no officer or employee of the Commission is, shall be, or become, directly or indirectly, interested as contracting party, partner, stockholder, surety, or otherwise in the performance of the Contract, or in the supplies, work or business to which it relates or in any portion of the profits thereof; that he has had an opportunity to examine the site of the work; that he has examined the form of Contract, Exhibits A and B therein referred to, and has read the Information for Bidders hereto attached; and he proposes and agrees, if this Bid be accepted, that he will contract in the form provided, to perform all the work and furnish all material(s) mentioned in said form of Contract and Specifications, and that he will accept in full payment therefore the following sum, to wit:

Bidders must submit a bid for the Base Bid, Unit Pricing, Optional Work #1 and Optional Work #2. Bids that fail to submit a bid as set forth above will be deemed incomplete. Pricing for Bid sections:

Base Bid

FOR THE FILTER REHABILITATION PROJECT AT the North Jersey District Water Supply Commission, including labor, equipment, materials and warranty and all work described in the Technical Specifications, as well as what is shown on the drawings, and as further required herein, for the *Base Bid* rehabilitation of three (3) filters *excluding* any electrical work for the lump sum price of:

_____ dollars and

_____ cents ($_____)

Unit Pricing

All labor, equipment, materials and warranty and all work described in Section 030000 of the Technical Specifications, as well as what is shown on the drawings, for the unit prices of:

Spall Repair (per SF) _____

dollars and _____ cents ($_____)

Crack Repair (per LF) _____

dollars and _____ cents ($_____)

***Optional work to include*:**

OPTIONAL WORK #1:

All labor, equipment, materials and warranty and all work described in the Technical Specifications, as well as what is shown on the drawings, and as further required herein, for each additional filter rehabilitation above the three filters included in the Base Bid *excluding* all electrical work for the lump sum price per additional filter of
_____ dollars and

_____ cents ($_____)

OPTIONAL WORK #2

All labor, equipment, materials and warranty and all electrical work described in the Technical Specifications, as well as what is shown on the drawings, and as further required herein, for the electrical work on a *per filter basis* for the lump sum price of
_____ dollars and

_____ cents ($_____)

Basis of Award will be established by the following formulas with estimated quantities (for award purposes), where F is the total number of filters (including the three in the Base Bid):

Formula for Basis of Award **without electric**:

Base Bid + F*(Spall Repair $/SF * 5SF) + F*(Crack Repair $/LF * 700LF) + (F-3)*(Optional Work #1)

Formula for Basis of Award **with electric**:

Base Bid + F*(Spall Repair $/SF * 5SF) + F*(Crack Repair $/LF * 700LF) + (F-3)*(Optional Work #1) + F*(Optional Work #2)

The Commission reserves the right to award the Optional Work, or a portion thereof, in its sole discretion.

NOTE: The price shall be printed in ink both words and figures. Any bid which fails to name a price both in words and in figures per unit and every item, wherein quantities are given, may be held to be non-responsive and may be rejected. In case of any discrepancy or conflict, the price written in words will take precedence over the written in figures and unit prices will take precedence over the sum of individual items.

What the Price is to Cover: The price is to include and cover the furnishing of the machinery, tools, apparatus and other means of construction and all material and labor necessary to complete the work in the manner and within the time set forth in the Contract.

Time within which Contract is to be Executed: The Successful Bidder shall execute this Contract and give to the Commission the required security within seven (7) working days from the date that said Contract has been awarded to him. Upon failure to do so, said Bidder will be considered as having abandoned the Contract.

Bidder acknowledges that the Commission reserves the right to reject any or all Bids which may be non-responsive or the acceptance of which, in the sole judgment of the Commission, may be detrimental to its interests.

Respectfully submitted,

_____

BIDDER

_____ _____

SIGNATURE OF AUTHORIZED AGENT TYPE OR PRINT NAME

_____

TITLE

_____ _____

TELEPHONE NUMBER E-MAIL ADDRESS

_____

WITNESS (IF INDIVIDUAL, PARTNERSHIP OR OTHER BUSINESS ENTITY)

_____

ATTEST: (CORPORATION) SECRETARY

NOTE: AFFIX CORPORATE SEAL

CONTRACT #2127

EXPERIENCE STATEMENT

TO: NORTH JERSEY DISTRICT WATER SUPPLY COMMISSION

Commissioners:

We hereby certify that we have performed the work listed below to the satisfaction of the Governing Bodies or Public Entities listed below. We further certify that we have never defaulted under any contract with a Municipality, County, or State, or any other Public Entity.

Note: Include no less than Five (5) references. (Experience Statement may be attached)

Give name of Public Entity or Unit of Government, nature of work, amount of work performed, when completed, and name and telephone number of party in charge of work.

_____

_____

_____

_____

_____

_____
WITNESS

_____
NAME OF COMPANY

_____
ADDRESS

_____
DATE

BY: _____
SIGNATURE

_____
PRINT NAME AND TITLE

CONTRACT #2127

EQUIPMENT STATEMENT

TO: NORTH JERSEY DISTRICT WATER SUPPLY COMMISSION

Commissioners:

We hereby certify that we are fully prepared with the necessary capital, material, and machinery to conduct the work as herein specified, and we further certify that the equipment required for the proper execution of this contract in the time specified is available as follows:

_____

_____

_____

_____

_____

_____

BY: _____
SIGNATURE

_____
PRINT NAME AND TITLE

_____ _____
WITNESS COMPANY NAME

_____ _____
DATE ADDRESS

CONTRACT #2127

LISTING OF SUBCONTRACTORS TO BE USED

Each Bidder shall submit to the Commission with its Bid, the List of Subcontractors proposed to be employed by the Contractor, complete with the names of all such Subcontractors, Suppliers, and other individuals and entities and the percentage of work to be performed by each Subcontractor. The list shall be accompanied by an experience statement with pertinent information regarding similar projects and other evidence of qualification for each such Subcontractor, Supplier, individual, or entity, for each Subcontractor's work that is proposed to exceed ten (10) percent of the Bid price. If, after due investigation, the Commission has reasonable objection to any proposed Subcontractor, Supplier, or other individual or entity, the Commission may, before the Notice of Award is given, request the apparent Successful Bidder to submit an acceptable substitute Subcontractor without an increase in the Bid Price.

If the apparent Successful Bidder declines to make any such substitution, the Commission may award the Contract to the next lowest responsible and responsive Bidder that proposes to use acceptable Subcontractors, Suppliers, and other individuals and entities. Declining to make requested substitutions will not constitute grounds for sacrificing the bid security of any Bidder. Any Subcontractor, Supplier, or other individual or entity so listed and against which the Commission makes no written objection prior to the giving of the Notice of Award will be deemed acceptable to the Commission, subject to revocation of such acceptance after the Effective Date of the Contract.

Should a Contractor utilize a substitute Subcontractor, Contractor shall immediately submit a revised form to the Commission, with the requisite information and documentation relating to the substitute Subcontractor.

WORK CATEGORY	SUBCONTRACTOR NAME	SUBCONTRACTOR ADDRESS

(Attach additional pages as required)

NOTE: Submission of the names and addresses of the Subcontractors is essential and non-waivable. Also, proof of registration pursuant to Public Works Contractors Registration Act for all named subcontractors is required to be provided prior to the award of a contract. Where ***more than one*** Subcontractor is named for a trade category, the bidder must identify, in the Bid, the scope of work that is to be performed by each subcontractor. Failure to comply with these requirements will result in the Bid being deemed nonresponsive.

CONTRACT #2127

NONCOLLUSION AFFIDAVIT

STATE OF **}**
S.S.:
COUNTY OF **}**

I _____ of the city of_____in the County of _____ and the State of _____ of full age, being duly sworn according to the law on my oath depose and say that: I am of the firm of _____
(Title)
the Bidder making the Bid for the above named project, and that I executed the said Bid with authority so to do; that said Bidder has not, directly or indirectly, entered into any agreement, participated in any collusion, or otherwise taken any action in restraint of free, competitive bidding in connection with the above-named project; and that all statements contained in the said Bid and in this Affidavit are sure and correct, and made with full knowledge that the **NORTH JERSEY DISTRICT WATER SUPPLY COMMISSION** relies upon the truth of the statements contained in said Bid and in the statements contained in this Affidavit in awarding the Contract for the said project.

I further warrant that no person or selling agency has been employed or retained to solicit or secure such Contract upon an agreement or understanding for a commission, percentage, brokerage or contingent fee, except bona fide employees or bona fide established commercial or selling agencies.

_____ _____
NAME OF CONTRACTOR OFFICER'S SIGNATURE

(Original signature only, stamped signature not accepted)

Subscribed and sworn
to before me this___day
of _____ 2024.

Notary Public of the State of_____.

My Commission expires _____, _____.

Affix notary stamp or print name below signature.

_____
NOTARY'S SIGNATURE

CONTRACT #2127

BIDDER DISCLOSURE STATEMENT

NOTE: **IF YOU FAIL TO PROPERLY OR CLEARLY COMPLETE THIS BIDDER DISCLOSURE STATEMENT, OR IF YOU FAIL TO INCLUDE IT WITH YOUR BID, YOUR BID WILL BE REJECTED.**

N.J.S.A. 52:25-24.2, requires that all corporate and partnership bidders for public contracts submit a list of names and addresses of all stockholders owning 10% or more of any class of their stock or 10% or more of the stock of a corporate bidder; or, in the case of partnership, the names and addresses of those partners owning 10% or greater interest in the partnership. Furthermore, the Commission requires a statement from all bidders which, regardless of business form, must likewise indicate all principals of the bidder.

Therefore, this Bidder Disclosure Statement must be fully and accurately completed. If no entity or person owns 10% or more of any class of stock of your corporation, or of an interest in your partnership or other business entity, write the word **"NONE"** below and execute this document as indicated.

I. **BUSINESS FORM**:

INDICATE THE BUSINESS FORM BY PLACING AN "X" IN THE APPROPRIATE SPACE:

{ } CORPORATION
{ } PARTNERSHIP
{ } OTHER, SPECIFY _____

II. **PRINCIPALS**:

NAME	HOME ADDRESS	TITLE	% OF OWNERSHIP
1.			
2.			
3.			
4.			

If one or more of the owners of the bidder is itself a corporation, partnership or other business entity, then for that owner, you must set forth the name, home address, title and percentage of ownership of every person who is an owner of 10% or more of that corporation, partnership or other business entity.

CONTRACT #2127

BIDDER DISCLOSURE STATEMENT

NAME	HOME ADDRESS	TITLE	% OF OWNERSHIP
1.			
2.			
3.			
4.			

ATTEST (FOR CORPORATION)

BY: _____
NAME: _____

TITLE: _____

WITNESS (FOR PARTNERSHIP OR OTHER BUSINESS ENTITY)

BY: _____ _____

NAME: _____

TITLE:_____

BY: _____ _____

NAME: _____

TITLE: _____

NOTE: **If the bidder is a corporation, the corporation's corporate seal must be affixed.**

BID #2127

CONSENT OF SURETY

KNOW ALL MEN BY THESE PRESENTS, THAT _____, a corporation of the State of _____having its principal office at _____being (a) surety company(ies) qualified to do business in the State of New Jersey, in consideration of the premises, and of one dollar to it (them) in hand paid by the Commission, and of other good and valuable consideration the receipt whereof is hereby acknowledged, do(es) consent and agree, that if the Contract for which the preceding bid is made be awarded to the person or persons making the same; it (they) will, upon award of such Contract, become surety, first, for the full and faithful performance of said work, and, secondly, for the protection of all persons in the performance of said Contract in the form required by N.J.S.A. 2A:44-143 to 2A:44-147 and the amendments thereof and supplements thereto; the performance bond and the labor, material and supply obligations each to be conditioned so as to indemnify the Commission against loss due to the failure of the Contractor to meet the stipulations of the respective bonds; said bond to be in the amount of 100% of the Contract price.

IN WITNESS WHEREOF, the said _____ has (have) caused its (their) corporate seal(s) to be hereto affixed and these presents to be signed by its (their) _____ and attested to by its (their) _____this _____ day of Two Thousand and Twenty-Three.

_____
Corporate Seal

By: _____

_____(as Surety)

ATTEST:

_____

THE CONSENT OF SURETY FORM ABOVE CONTAINS THE LANGUAGE THE COMMISSION FINDS ACCEPTABLE.

WE SUGGEST THE ABOVE BE COMPLETED BY YOUR SURETY COMPANY(IES) AND SUBMITTED WITH YOUR BID IN LIEU OF SUBMITTING THE SURETY'S OWN FORM.

BY DOING THIS, YOU REDUCE THE RISK OF YOUR BID BEING REJECTED FOR HAVING SUBMITTED A CONSENT OF SURETY WHICH CONTAINS INCORRECT AND UNSATISFACTORY LANGUAGE.

NOTE: THE INDIVIDUAL EXECUTING THE SURETY CONSENT ON BEHALF OF THE SURETY MUST SUPPLY WITH THE CONSENT, WRITTEN EVIDENCE THAT HE OR SHE IS AUTHORIZED TO BIND THE SURETY AS OF THE DATE OF THE EXECUTION OF THE CONSENT.

BID #2127

ACKNOWLEDGMENT OF RECEIPT OF CHANGES TO BID DOCUMENTS FORM

_____

(Name of Contracting Unit)

_____ _____

(Name of Construction/Public Works Project) **(Project or Bid Number)**

The undersigned Bidder hereby acknowledges receipt of the following notices, revisions, or addenda to the bid advertisement, specifications or bid documents. By indicating date of receipt, Bidder acknowledges the submitted Bid takes into account the provisions of the notice, revision or addendum. Note that the Commission's record of Notice to Bidders shall take precedence and that failure to include provisions of changes in a Bid may be subject for rejection of the Bid. In the event that no notices, revisions or addenda to the bid advertisement, specifications or bid documents are received by the Bidder, the Bidder must indicate ***"none"*** in the space below. ***Failure to submit "Acknowledgment of Receipt of Changes to Bid Documents Form" shall be deemed a material and non-waivable defect, and shall be cause for rejection of the Bid without further consideration.***

Commission's Reference Number or Title of Addendum/Clarification	How Received (mail, fax, pick-up, etc.)	Date Received

Acknowledgment by Bidder:

Name of Bidder: _____

By Authorized Representative: _____

Signature: _____

Printed Name and Title: _____

Date: _____

BID #2127

SAFETY TRAINING ACKNOWLEDGMENT

_____

(Name of Contracting Unit)

_____ _____

(Name of Construction/Public Works Project) **(Project or Bid Number)**

All equipment and work methods utilized in this Contract shall comply with OSHA and all other applicable local, state and/or federal safety standards and regulations. Contractor and all subcontractors shall be required to attend a Contractor Safety Orientation prior to beginning construction.

Acknowledgment by Bidder:

Name of Bidder: _____

By Authorized Representative: _____

Signature: _____

Printed Name and Title: _____

Date: _____

BID #2127

SECURITY MEASURES ACKNOWLEDGMENT

_____

(Name of Contracting Unit)

_____ _____

(Name of Construction/Public Works Project) **(Project or Bid Number)**

The undersigned Bidder hereby acknowledges that he/she is familiar with the Commission's security requirements for this project and agrees to abide by same. The Contractor shall be responsible for insuring that all subcontractors for this project abide by these security measures as well.

Contractors and all subcontractors shall be required to comply with said requirements prior to beginning construction on this Contract.*

Acknowledgment by Bidder:

Name of Bidder: _____

By Authorized Representative: _____

Signature: _____

Printed Name and Title: _____

Date: _____

***As required by the New Jersey Office of Counter Terrorism's Best Management Practices, Contractors must provide evidence that it has previously conducted a background check on all Contractor's employees who will be entering onto Commission property. Contractors shall provide the Commission with a corporate letter, on appropriate letterhead, stating the names of all employees who will require access to the Commission's property, and indicating that such background checks have, in fact, been performed. All subcontractors are also required to provide such employee list, and confirmation of background checks**

BID #2127

BID CHECKLIST

ALL ITEMS LISTED BELOW MUST ACCOMPANY THIS BID UNLESS OTHERWISE INDICATED. PLEASE CHECK ALL ITEMS BEFORE SUBMITTING:

A) FAILURE TO PROVIDE OR PROPERLY COMPLETE OR SIGN ANY OF THESE ITEMS BELOW WILL RESULT IN A MANDATORY REJECTION OF THE BID.

___ (1) SECURITY IN THE FORM OF:

___ A BID BOND IN AN AMOUNT EQUAL TO 10% OF THE TOTAL AMOUNT OF THIS BID, NOT TO EXCEED $20,000.

OR

___ A CERTIFIED CHECK IN THE AMOUNT OF 10% OF THIS BID, BUT NOT IN EXCESS OF $20,000.

OR

___ A CASHIER'S CHECK IN THE AMOUNT OF 10% OF THIS BID, BUT NOT IN EXCESS OF $20,000.

___ (2) SURETY COMPANY CONSENT (IN ADDITION TO SECURITY IN ITEM #1 ABOVE).

___ (3) BIDDER DISCLOSURE STATEMENT

___ (4) ACKNOWLEDGMENT OF RECEIPT OF CHANGES TO BID DOCUMENTS

B) FAILURE TO PROVIDE OR PROPERLY COMPLETE OR SIGN ANY OF THE ITEMS BELOW MAY RESULT IN A REJECTION OF THE BID.

___ (1) BUSINESS REGISTRATION CERTIFICATE FOR CONTRACTOR OR ANY SUBCONTRACTORS

___ (2) PROOF OF PUBLIC WORKS CONTRACTOR REGISTRATION OR ANY SUBCONTRATORS

___ (3) LIST OF SUBCONTRACTORS

___ (4) EXPERIENCE STATEMENT

___ (5) EQUIPMENT STATEMENT

___ (6) NONCOLLUSION AFFIDAVIT

___ (7) SAFETY TRAINING ACKNOWLEDGMENT

___ (8) SECURITY MEASURES ACKNOWLEDGMENT

___ (9) DISCLOSURE OF INVESTMENT ACTIVITIES IN IRAN

(CONTRACTOR)

BY: _____

SIGNATURE

_____

PRINT NAME AND TITLE

CONTRACT #2127

GENERAL CONDITIONS

NORTH JERSEY DISTRICT WATER SUPPLY COMMISSION
WANAQUE, NEW JERSEY

THIS AGREEMENT, made and entered into on the date set forth herein by and between the **NORTH JERSEY DISTRICT WATER SUPPLY COMMISSION**, party of the first part, hereinafter designated as the Commission, and _____party of the second part, hereinafter designated as the Contractor.

COVENANTS: WITNESSETH, that the parties to these presents each in consideration of the undertakings, promises and agreements on the part of the other herein contained, have undertaken, promised and agreed, and do hereby undertake, promise and agree, the party of the first part for itself, its successors and assigns, and the party of the second part for heirs, executors and administrators, or successors and assigns, as follows:

PRICE FOR WORK: The Commission will pay and the Contractor shall receive as full compensation for furnishing all the shop drawings, materials and labor and for performing and completing all the work which is necessary or proper to be furnished or performed in order to complete the entire work in this Contract described and specified in said technical specifications and plans, described and shown; and also for all losses or damages arising out of the nature of the work aforesaid, or from any unforeseen obstruction or difficulty encountered in the prosecution of the work; and for all expenses incurred by or in consequence of the suspension or discontinuance of the work as herein specified, the prices stipulated as follows.

Pricing for Bid sections:

Base Bid

FOR THE FILTER REHABILITATION PROJECT AT the North Jersey District Water Supply Commission, including labor, equipment, materials and warranty and all work described in the Technical Specifications, as well as what is shown on the drawings, and as further required herein, for the *Base Bid* rehabilitation of three (3) filters *excluding* any electrical work for the lump sum price of:

_____ dollars and

_____ cents ($_____)

Unit Pricing

CONTRACT #2127

GENERAL CONDITIONS

All labor, equipment, materials and warranty and all work described in Section 030000 of the Technical Specifications, as well as what is shown on the drawings, for the unit prices of:

Spall Repair (per SF) _____

dollars and _____ cents ($_____)

Crack Repair (per LF) _____

dollars and _____ cents ($_____)

***Optional work to include*:**

OPTIONAL WORK #1:

All labor, equipment, materials and warranty and all work described in the Technical Specifications, as well as what is shown on the drawings, and as further required herein, for each additional filter rehabilitation above the three filters included in the Base Bid *excluding* all electrical work for the lump sum price per additional filter of
_____ dollars and

_____ cents ($_____)

OPTIONAL WORK #2

All labor, equipment, materials and warranty and all electrical work described in the Technical Specifications, as well as what is shown on the drawings, and as further required herein, for the electrical work on a *per filter basis* for the lump sum price of
_____ dollars and

_____ cents ($_____)

CONTRACT #2127

GENERAL CONDITIONS

Basis of Award will be established by the following formulas with estimated quantities (for award purposes), where F is the total number of filters (including the three in the Base Bid):

Formula for Basis of Award **without electric**:

Base Bid + F*(Spall Repair $/SF * 5SF) + F*(Crack Repair $/LF * 700LF) + (F-3)*(Optional Work #1)

Formula for Basis of Award **with electric**:

Base Bid + F*(Spall Repair $/SF * 5SF) + F*(Crack Repair $/LF * 700LF) + (F-3)*(Optional Work #1) + F*(Optional Work #2)

The Commission reserves the right to award the Optional Work, or a portion thereof, in its sole discretion.

NOTE: The price shall be printed in ink both words and figures. Any bid which fails to name a price both in words and in figures per unit and every item, wherein quantities are given, may be held to be non-responsive and may be rejected. In case of any discrepancy or conflict, the price written in words will take precedence over the written in figures.

WHAT THE PRICE IS TO COVER: The price is to include and cover the furnishing of the machinery, tools, apparatus and other means of construction and all material and labor necessary to complete the work in the manner and within the time set forth in the Contract.

Article I - DEFINITIONS:

Commission: the **NORTH JERSEY DISTRICT WATER SUPPLY COMMISSION**, Wanaque, New Jersey; the party of the first part to this Contract.

Contractor: the party of the second part to this Contract.

Contract: this Agreement covering the performance of the work for the project and payments therefore, including the general conditions, the Bid Specifications for **Contract #2127** (including any Addendums/Clarifications), the Proposal and all sheets, forms or documents attached to the Bid Specifications or hereto.

Engineer: Commission's Engineering Staff.

Exhibits: Exhibit A and Exhibit B, included at the end of this Contract, incorporated herein by reference.

Proposal: the proposal submitted by the Contractor, dated _____, 2023, incorporated herein by reference.

GENERAL CONDITIONS

Specifications: the specifications and plans included as Exhibits A and B to this Contract, incorporated herein by reference.

Article II - RIGHTS AND DUTIES OF THE ENGINEER:

A. The Engineer shall, subject to the provision of Articles III and IV, give all orders and directions contemplated under this Contract and determine in all cases the amount, quality, acceptability and fitness of the work and materials which are to be paid for by the Commission to the Contractor.

B. The Engineer shall have the right to reject any or all work which does not conform to the plans and specifications of this Contract, or is not completed in a workmanlike manner. She/He shall also have the right to reject materials which do not meet the specifications herein contained, have become damaged, rendered unsatisfactory, or have been supplied without evidence of quantity and/or quality such as labels, bills of lading, etc.

C. The Engineer shall have the free access to the work whenever and wherever it is in progress, for purposes of inspection. If any work should be covered up without prior approval or consent of the Engineer, it must, if required by the Engineer, be uncovered for examination at the Contractor's expense.

D. The Engineer shall have the right to stop the work whenever such stoppage may be necessary for protection of the reservoir, for emergency conditions, or to prevent potential damage to property, equipment, or facilities and/or personal injury.

E. The Engineer shall provide the Contractor with such basic lines, grades and points as are needed from which the Contractor shall establish such other points as he may need, unless otherwise specified.

Article III - REVIEW BY COMMISSION:

Notwithstanding anything herein contained, the Contractor shall have the right to appeal to the Commission, in accordance with Article XXII, concerning any matter in dispute and the Commission’s decision on such appeal shall be final.

Article IV - CHANGES:

A. Notwithstanding anything herein contained, no departure from or substitution, change or alteration in the terms, provisions or requirements of this Contract and the specifications thereof, shall be made without the prior order of the Commission as

duly executed by its Chairman.

B. The Engineer, however, shall have the right to make minor changes in the specifications during the conduct of the work if necessary in keeping with good engineering practice if such changes are consistent with the purpose, intent and/or conditions of the contract and shall not result in significant extra costs to the Contractor.

C. Authorization for any additional work or materials (extras) requiring compensation not provided for in this Contract, or change orders, must be obtained in writing from the Commission. The Commission will not pay the Contractor for additional services or materials based on verbal agreements or conversations with a Commission employee.

Article V - OBLIGATIONS OF THE CONTRACTOR:

A. The Contractor shall do all the work and furnish all the labor, supervision, transportation, materials, tools, equipment, etc., (except as herein otherwise provided)**,** in accordance with this Contract and the Specifications and/or the direction of the Engineer. The Contractor shall complete said work to the total satisfaction of the Engineer at a price agreed upon and fixed by the terms of this Contract.

B. It is understood that the Contractor shall have had an opportunity to carefully examine the areas and/or facilities involved in this Contract prior to entering into this Contract and that he has fully satisfied himself as to the nature and location of the work, subsurface conditions, the character of equipment and facilities needed, the time and labor requirements, and all such matters which can affect the work to be performed. The Commission will not be responsible for additional expenses incurred by the Contractor as a result of obtaining information from any person or employee of the Commission in lieu of personal inspection or investigation.

C. The Contractor shall carefully preserve bench marks, reference points and stakes provided by the Engineer, and shall be responsible for any delays or mistakes that may be caused by their unnecessary loss or disturbance. The Contractor shall also carefully preserve all permanent property corners and bench marks, such as pipes, monuments, etc., and if lost or disturbed shall be responsible for resetting same, through the services of a licensed Land Surveyor whose services shall be paid for by the Contractor.

D. The Contractor shall continuously provide adequate protection at the work site to prevent the possibility of injury to any and all persons or property whether of the Commission or not. The Contractor shall secure the work site at any time when work is temporarily halted by reason of weather, time, etc., by providing adequate barricades, fences, lighting, personnel, etc., so as to prevent injury to persons or

property. All such damage, injury or loss, except as may be due to errors in the Contract or caused by employees of the Commission, shall be made good by the Contractor.

E. The Contractor shall, during the progress of the work, attend the work site personally or through a competent English-speaking superintendent authorized to receive and carry out instructions.

F. The Contractor will be required to check all dimensions and quantities on any drawings or specifications given to him by the Engineer. In case of error or omission, the Contractor will not be allowed to benefit thereby, and instead should report same to the Engineer to obtain special instructions.

G. The Contractor shall be responsible for all materials, tools, equipment, etc., to be stored at or near the job site.

H. The Contractor shall, upon completion of the work, and to the complete satisfaction of the Engineer, remove from all Commission and/or private property, at its own expense, all temporary structures, rubbish, spillage, waste materials, drums, etc., which have resulted from the Contractor's operations. Final inspection and/or acceptance of the project by the Engineer for payment will not be made until all work has been completed and all final cleaning operations have been performed.

Article VI - TIME FOR COMPLETING WORK, EXTENSION OF TIME, AND LIQUIDATED DAMAGES

A. Time for Completing Work:

The Contractor shall commence the work within seven (7) days from the issuance of the Notice to Proceed by the Commission. The Contractor shall achieve Substantial Completion within = 240 + (Number of filters awarded –1)*90. By way of example only, if four filters are awarded, then 240 + (4-1)*90 = 510 days for full completion of the project from the day of Notice to Proceed.

B. Working hours shall be between **7:00 a.m. to 4:30 p.m**. No work shall be permitted on Saturdays, Sundays and legal holidays without special prior consent of the Engineer.

C. Written approval of an extension of time, obtained by the Contractor from the Engineer, shall be the sole and exclusive remedy to the Contractor as a result of delays in the commencement, prosecution or completion of the work, resulting from, but not limited to:

1. acts or omissions of the Commission or Engineer or other contractor employed by the Commission, with respect to late drawings, plans or specifications, changes in sequence, lack of decision, lack of access,

interference, errors, lack of approvals, erroneous bid specifications, lack of payments, issuance of change orders;

2. differing site conditions, strikes, labor or material shortages, unusual delays in transportation and acts of God, such as tornadoes, earthquakes or extreme weather.

D. The date of beginning and the time for completion, as specified herein, are **ESSENTIAL CONDITIONS** of this Contract; and it is agreed that the work embraced in this Contract shall be commenced within seven (7) days from the issuance of the Notice to Proceed. The work set forth in this Contract shall be prosecuted regularly, diligently and uninterruptedly at such rate of progress as shall insure full completion thereof within the time specified. It is expressly understood and agreed, by and between the Contractor and the Commission, that the time for the completion of the work described herein is a reasonable time for the completion of the same taking into consideration the average climatic range and usual industrial conditions prevailing in this locality.

E. LIQUIDATED DAMAGES

If the Contractor shall not complete the work within the time herein specified, or any proper extension thereof granted by the Commission, then the Contractor does hereby agree, as part consideration for the awarding of this Contract, to pay the Commission ***TWO HUNDRED FIFTY ($250.00) per day after the Substantial Completion Deadline.*** Liquidated damages shall be in accordance with the Liquidated Damages Schedule as set forth in Section 011216-1 of the Technical Specifications, for such breach of contract as hereinafter set forth, for each and every calendar day that the Contractor shall be in default after the time stipulated in the Bid Specifications for completing the work.

The Commission may, in its sole discretion, review any purported reasons for delay and consider an extension or change order pursuant to the terms of Contract. The Commission shall have the right to offset from monies owed the Contractor under this Contract any and all monies owed the Commission as Liquidated Damages

F. Time is of the essence for each and every portion of work required herein. Where additional time is allowed for the completion of any work, the new time limit fixed by such extension shall be of the essence under this Contract.

G. The Contractor will not be charged with liquidated damages when, in the opinion of the Engineer, the delay in completion of the work is due to unforeseeable cause beyond the control and without the fault or negligence of the Contractor, such as but not restricted to, differing site conditions, strikes, labor or material shortages, unusual

delays in transportation and acts of God, such as tornadoes, earthquakes or extreme weather.

Article VII - CONTRACTOR'S INSURANCE AND INDEMNIFICATION REQUIREMENTS

A. The Contractor shall, at all times during the term of this Agreement, obtain and maintain continuously, at its own expense, and file with the Commission and its insurance broker evidence of coverage as enumerated below.

1. Commercial General Liability Insurance:

Commercial General Liability Insurance, written on an industry standard occurrence form (CG 00 01), 1207 Edition or Equivalent

The Contractor shall maintain Products Completed Operations liability coverage for a period of at least 24 months following the Final Project Completion Date.

Such policy (ies) must provide the following minimum limits:

$2,000,000	General Aggregate - Applies Per Project
$1,000,000	Products & Completed Operations Aggregate
$1,000,000	Personal & Advertising Injury
$1,000,000	Each Occurrence Limit
$ 100,000	Fire Damage Legal Liability

Any deductible or self-insured retention must be disclosed and is subject to approval by the Commission. The Cost of any claim payments falling within the deductible shall be the responsibility of the Contractor.

2. Business Automobile Liability:

Including coverage for owned, non-owned, leased or hired vehicles, written on an industry standard form (CA 00 01) or equivalent. Such policy (ies) must provide the following minimum limits:

$1,000,000 Combined Single Limit (Bodily Injury & Property Damage)

Should include endorsement CA 9948 Pollution Endorsement

3. Worker's Compensation:

Worker's Compensation Limits: Statutory
Employer's Liability:

$1,000,000 Each Accident
$1,000,000 Disease – Policy Limit

$1,000,000 Disease – Each Employee

4. Excess/Umbrella Insurance:

Schedule of Underlying to include: General Liability, Employers Liability and Auto Liability as outlined above.

Minimum Limit of Liability: $3,000,000 Per Occurrence
$3,000,000 Aggregate

5. Evidence of Insurance:

The following documents must be provided in conjunction with a Certificate of Insurance:

- A copy of the endorsement naming the Commission as an Additional Insured, on Form CG2010 or equivalent on all policies except Worker's Compensation.
- A copy of an endorsement stating that the coverages provided by this policy to the Commission shall not be terminated, reduced or otherwise materially changed without providing at least thirty (30) days prior written notice to the Commission.
- A waiver of subrogation in favor of the Commission should apply under all the policies outlined in this section except for Worker's Compensation.
- General Contractor and Subcontractors "if any" are required to maintain the same level of coverage as outlined in section 1 and provide Certificates of Insurance and copies of supporting endorsements.

All policies must be rated A-VII or higher in the A.M. Best's Key Rating Guide and licensed to do business in the State of New Jersey or are an eligible Surplus Lines Insurer or are an acceptable Joint Insurance Fund.

Acceptance by the Commission of deficit evidence of insurance does not constitute a waiver of contract requirement as provided by conditions of the contract.

B. Indemnification

The Contractor hereby agrees to fully indemnify, defend and hold harmless the Commission, the Commissioners, its members, directors, officers, agents, servants, employees and successors and assigns from and against all losses, fines, penalties, damages, lawsuits, claims, causes of action, liabilities, demands, obligations to Contractor, and expenses, including attorneys' fees in connection with the loss of life, personal injury, bodily injury, and/or property damage, if

occasioned in whole or in part by any negligent act or omission of the Contractor or the Contractor's agent's, servants, employees, and subcontractors in the performance of services and provision of goods under this Contract. This obligation shall include the provision of a defense for the Commission at all stages of the claims or judicial process and together with all losses, fines, penalties, costs and expenses relating to any of the foregoing, including but not limited to, court costs and reasonable attorneys' fees arising out of this Contract and to enforce this indemnification provision.

Article VIII - LAWS, REGULATIONS AND PERMITS:

A. The Contractor shall keep itself fully informed of all laws, ordinances and regulations or decrees which in any manner would affect persons or materials in any way used, engaged or employed in the work or which affect the conduct of the work.

If any discrepancy or inconsistency should be discovered in this Contract, or in the drawings or specifications herein referred to, in relation to any such law, ordinance, regulation, order of decree, the Contractor shall forthwith report the same in writing to the Commission.

B. The Contractor shall at all times observe and comply with and shall cause all its agents and employees to observe all such laws, ordinances, regulations, orders and decrees, and shall protect, indemnify and save harmless the Commission and its officers and agents against any claim or liability arising from or based on the violation of any such law, ordinance, regulation, order or decree, whether by the Contractor, its employees or agents.

C. Permits and/or licenses of a temporary nature which are necessary for the prosecution of the work shall be secured and paid for by the Contractor prior to commencement of such work as would require permits and/or licenses.

Article IX - ASSIGNMENT:

A. The Contractor shall not assign, transfer, convey, sublet or otherwise dispose of this Contract, as a whole; or his right, title or interest in or to the same or any part thereof, without the previous consent in writing of the Commission endorsed herein or hereto attached; and it shall not assign, by power of attorney or otherwise, any of the monies to become due and payable under this Contract, unless by and with the like consent signified in like manner.

B. If the Contractor shall, without such previous written consent, assign, transfer, convey, sublet, or otherwise dispose of this Contract, or of its right, title or interest therein, or any of the monies to become due hereunder, this Contract may, at the option of the Commission, be revoked and annulled, and the Commission shall thereupon be relieved and discharged from any and all liability and obligations growing out of the same to the Contractor and to its assignee or transferee; and the Commission shall be in nowise deprived of or restricted in its right to sue for and

recover damages for any breach of this Contract.

Article X - PATENTS:

The Contractor shall hold itself responsible for claims made against the Commission for infringement of patents by the use of patented articles in the construction and completion of the work, or in any process connected with the work agreed to be performed under this Contract or with the materials used upon the said work, and shall indemnify and save harmless the Commission for all costs, expenses and damages which the Commission shall be obliged to pay by reason of any infringement of patents used in the construction and completion of the work under this Contract, including attorney's fees.

Article XI - NEW JERSEY PREVAILING WAGE ACT (N.J.S.A 34.11-56.25 et seq.):

A. The Contractor is put on notice that it must pay all of its employees rendering services under this Contract in compliance with the prevailing wage rates promulgated by the New Jersey Department of Labor, a copy of which is on file at the Commission's Administrative Offices in Wanaque, New Jersey, and is hereby made a part of this Contract. In addition, the Contractor shall conform to all other labor laws and statutes established in this State.

B. In the event it is found that any employee of the Contractor or Subcontractor covered by this Contract has been paid a rate of wages less than the prevailing wages required to be paid by the Contractor or Subcontractor, this Commission shall have the right to terminate the Contract, or such part of the Contract as to which there has been a failure to pay the required wages and to prosecute the Contract to completion or otherwise. The Contractor and its sureties shall be liable to the Commission for any excess costs occasioned thereby.

Article XII - PAYMENTS:

The Contractor will be entitled to payment upon final inspection and acceptance of the work by the Commission’s Engineer, less any retainage held by the Commission, within sixty (60) days after (a) all portions of work have been fully completed as required by the Contract to the satisfaction of the Engineer; and (b) the Engineer has certified such completion to the Commission.

The Contractor agrees that he shall indemnify and save the Commission harmless from all claims growing out of the lawful demands of Subcontractors, laborers, workmen, mechanics, materialmen and furnishes of machinery and parts thereof, equipment power tools, and all supplies, including commissary, incurred in the furtherance of the performance of this Contract. The Contractor shall, at the Commission's request, furnish satisfactory evidence that all obligations of the nature hereinabove designed have to be paid, discharged, or waived. If the Contractor fails to do so, then the Commission may, after having served written notice on the said Contractor, either pay unpaid bills, of which the Commission has

written notice, directly or withhold from the Contractor's unpaid compensation a sum of money deemed reasonably sufficient to pay any and all such lawful claims until satisfactory evidence is furnished that all liabilities have been fully discharged whereupon payment to the Contractor will be resumed, in accordance with the terms of this Contract, but in no event shall the provisions of this sentence be construed to impose any obligations upon the Commission to the Contractor.

In paying any unpaid bills of the Contractor, the Commission shall be deemed the agent of the Contractor, and any payment, so made by the Commission, shall be considered as a payment made under the Contract by the Commission to the Contractor, and the Commission shall not be liable to the Contractor for such payment made in good faith.

A. **Payment**:

1. Upon receipt of written notice from the Contractor that the project is complete, the Engineer will make a final inspection and will notify the Contractor in writing of any particulars in which this inspection reveals that the work is defective. The Contractor shall immediately make such corrections as are necessary to remedy such defects.

2. When the Contractor has completed all such corrections to the satisfaction of the Engineer and delivered all maintenance and operating instructions, schedules, as-built drawings, guarantees, bonds, certificates and other documents, all as required by the Contract, the Proposal and the Bid Specifications (the "Contract Documents"), he may make application for final payment. The Engineer will review actual as-built field measurements, the amount of the work by the Contractor, and the value of such work pursuant to the terms of the Contract to determine whether to issue a final acceptance of the work. Upon final acceptance of the work, the Engineer will process the final payment upon receipt of a Maintenance Bond as described in the Bid Specifications.

3. The acceptance by the Contractor of Final Payment shall be and shall operate as a release to the Commission of all claims and all liability to the Contractor for all things done or furnished in connection with this work and for every act or neglect of the Commission and others relating to or arising out of this work. No payment, however, final or otherwise, shall operate to release the Contractor or his Sureties from any obligation set forth in the Contract Documents, including any applicable performance, payment, maintenance bond or other type of bid security.

B. **Partial Payment**:

1. No claim by the Contractor for additional payment based on any error in any periodic estimate will be recognized.

2. The Commission may withhold payment for any of the following:

a. Failure to submit a revised progress schedule, which has been approved by the Engineer, with each partial payment request.

b. Defective work not corrected.

c. Claims filed or responsible evidence indicating a reasonable probability of claims being filed.

d. Failure of the Contractor to make proper payments to Subcontractor or for material or labor.

e. Unpaid damages by the Contractor to Subcontractor, the Commission, or any other agency or person.

f. In the judgment of the Engineer the project is not proceeding in accordance with the Contract or the Contractor is not complying with the requirements of the Contract Documents.

g. The Contractor is found in to be in default under the terms of the Contract.

3. No payment voucher shall protect the Contractor, and no claims shall be founded thereof by the Contractor in case of overpayment, or in case it shall at any time appear that the project or any part thereof has not been constructed, completed and maintained in strict accordance with the Contract Documents.

4. No interim voucher shall be held to signify the approval of permanent work, materials, or other things to which such certificate relates and the Contractor shall not be relieved by any such certificates from any risks of liability to which he may be subject under the Contract until final payment hereinafter referred to has been granted to it.

5. Errors in any monthly measurements or bill, on being discovered, will be rectified by the Engineer in subsequent measurements and bills.

6. If any work, the value of which has been included in any interim bill is damaged or destroyed and has to be removed or reconstructed by the Contractor, an amount representing the value of the work so damaged or destroyed, less any insurance monies therefore received by the Commission, will be deducted by the Engineer in succeeding partial payments until such time as work has been renovated or reconstructed.

7. State law requires that all claims for payments be approved by the governing body of the Commission. The Contractor shall allow six (6) to eight (8) weeks for receipt of partial payment after the payment has been approved by the Engineer.

Article XIII - MONEY MAY BE RETAINED:

The Commission may keep any monies which would otherwise be payable at any time hereunder, and apply the same, or so much as may be necessary therefore, to the payment of any expenses, losses or damages, as determined by the Engineer, incurred by the Commission which, pursuant to this Contract or the specifications shall be borne by the Contractor, and may retain until all claims shall have been settled so much of such monies as the Commission shall be of the opinion will be required to settle all claims against the Commission and its officers and agents and all claims for labor on the work, and also all these claims for materials.

Article XIV – REPAIRS, BONDS, AND RETAINAGE:

A. The Contractor shall at its own cost, upon notification from the Commission or Engineer, promptly make good any and all defects, in its work, or that of any subcontractor employed by it hereunder, which may occur or appear during the progress of the work.

B. If, within ten (10) days after the delivery or mailing of notice in writing to the Contractor, or its agents, of the occurrence or appearance of any such fault in the work, the Contractor fails to remedy same, the Commission may remedy the same or cause it to be remedied without previous notice and/or in case of any emergency where, in the opinion of the Engineer, delay would cause serious loss or damage.

C. The cost of any defects so remedied or caused to be remedied by the Commission shall be borne solely by the Contractor, and any sum expended, or any expense so incurred by the Commission shall be deducted from any money then due or thereafter growing due from the Commission to the Contractor.

D. In order to secure the performance of the above, the Contractor shall furnish a **Performance and Payment Bond to the Commission** at the time of execution of this Contract, in the sum of one hundred percent (100%) of the Contract price. Said bond shall be in form and content satisfactory to the Commission.

E. Upon completion of the work hereunder and prior to its final acceptance by the Commission, the Contractor shall furnish the Commission with a **Maintenance Bond** in the amount of 100% of the Contract price which shall remain in full force and effect for a period of one year from the final date of acceptance of the work by the Commission. Said bond shall be in the form and content satisfactory to the Commission.

F. The Commission shall retain **five percent (5%)** of the total contract amount of money due for a period of **six (6) months** from the date of final acceptance of all of the work by the Commission, to be applied to any defects not remedied by the Contractor by

the end of the six-month period.

Article XV - TERMINATION OF LIABILITY:

Upon acceptance by the Contractor, or his authorized agents, of the final payment under the provisions of this Contract, the project shall be considered completed and the Contractor shall have no further interest or claim whatever against the Commission or any of its officers or agents, except for amounts kept or retained or otherwise specifically provided herein.

Article XVI - STATUTORY COMPLIANCE:

The Contractor is required to comply with all applicable laws, regulations and ordinances.

Article XVII - BUY AMERICAN ACTS:

The Contractor and his subcontractors, if any, must comply with all "Buy American" statutes or regulations, including N.J.S.A. 52:33-1 et seq.

The Commission reserves the right to accept non-domestic materials under this contract in accordance with N.J.S.A. 52:33-2 and 52:33-3, in the event: (i) it determines the use of domestic materials is "impractical" or "inconsistent with the public interest"; (ii) it determines that the cost of using domestic materials is "unreasonable"; or (iii) domestic materials of the class or kind sought are not mined, produced, or manufactured, as the case may be, in the United States in commercial quantities and of a quality satisfactory to the Commission.

Article XVIII - AFFIRMATIVE ACTION:

The Contractor is required to comply with the requirements of N.J.S.A. 10:5-31 et seq. and N.J.A.C. 17:27-1 et seq.

The Contractor shall complete and submit an Initial Project Workforce Report Form AA-201 upon notification of the contract award. Proper completion and submission of this report shall constitute evidence of the Contractor's compliance with the regulations. The Contractor shall also submit a copy of the Monthly Project Workforce Report Form AA-202 once a month thereafter for the duration of the Contract to the Division of Contract Compliance and Equal Employment Opportunity in Public Contracts in the Department of Treasury and to the Commission (the "Division").

Additionally, during the performance of this Contract, the Contractor agrees as follows:

The Contractor or subcontractor, where applicable, will not discriminate against any employee or applicant for employment because of age, race, creed, color, national origin, ancestry, marital status, affectional or sexual orientation, gender identity or expression, disability, nationality or sex. Except with respect to affectional or sexual orientation, the

Contractor will take affirmative action to ensure that such applicants are recruited and employed, and that employees are treated during employment, without regard to their age, race, creed, color, national origin, ancestry, marital status, affectional or sexual orientation, gender identity or expression, disability, nationality or sex. Such action shall include, but not be limited to the following: employment, upgrading, demotion, or transfer; recruitment or recruitment advertising; layoff or termination; rates of pay or other forms of compensation; and selection for training, including apprenticeship. The Contractor agrees to post in conspicuous places, available to employees and applicants for employment, notices to be provided by the Public Agency Compliance Officer setting forth provisions of this nondiscrimination clause.

The Contractor or subcontractor, where applicable will, in all solicitations or advertisements for employees placed by or on behalf of the Contractor, state that all qualified applicants will receive consideration for employment without regard to age, race, creed, color national origin, ancestry, marital status, affectional or sexual orientation, gender identity or expression, disability, nationality or sex;

The Contractor or subcontractor, where applicable, will send to each labor union or representative of workers with which it has a collective bargaining agreement or other contract or understanding, a notice, to be provided by the agency contracting officer advising the labor union or workers' representative of the Contractor's commitments under this act and shall post copies of the notice in conspicuous places available to employees and applicants for employment.

The Contractor or subcontractor, where applicable, agrees to comply with any regulations promulgated by the State Treasurer pursuant to N.J.S.A. 10:5-31 et seq., as amended and supplemented from time to time and the Americans with Disabilities Act. However, if a subcontractor has a total workforce of four (4) or fewer employees or if the Contractor or subcontractor is performing under an existing Federally approved or sanctioned affirmative action program, the contract shall contain only the mandatory language required by N.J.A.C. 17:27-3.8(a).

When hiring or scheduling workers in each construction trade, the Contractor or subcontractor agrees to make good faith efforts to employ minority and women workers in each construction trade consistent with the applicable employment goal prescribed by N.J.A.C. 17:27-7.2; provided, however, that the Division may, in its discretion, exempt the Contractor or subcontractor from compliance with the good faith procedures prescribed by the following provisions, A, B and C, as long as the Division is satisfied that the Contractor or subcontractor is employing workers provided by a union which provides evidence, in accordance with standards prescribed by the Division, that its percentage of active "card carrying" members who are minority and women workers is equal to or greater than the applicable employment goal established in accordance with N.J.A.C. 17:27-7.2.

The Contractor or subcontractor agrees that a good faith effort shall include compliance with the following procedures:

CONTRACT #2127

GENERAL CONDITIONS

A. If the Contractor or subcontractor has a referral agreement or arrangement with a union for a construction trade, the Contractor or subcontractor shall, within three days of the contract award, seek assurances from the union that it will cooperate with the Contractor or subcontractor as it fulfills its affirmative action obligations under this contract and in accordance with the rules promulgated by the Treasurer pursuant to N.J.S.A. 10:531 et seq., as supplemented and amended from time to time and the Americans with Disabilities Act. If the Contractor or subcontractor is unable to obtain said assurances from the construction trade union at least five (5) days prior to the commencement of construction work, the Contractor or subcontractor agrees to attempt to hire minority and women workers directly, consistent with the applicable employment goal. If the Contractor's or, subcontractor's prior experience with a construction trade union, regardless of whether the union has provided said assurances, indicates a significant possibility that the trade union will not refer sufficient minority and women workers consistent with the applicable employment goal, the Contractor's or subcontractor's agrees to be prepared to hire or schedule minority and women workers directly, consistent with the applicable employment goal, by complying with the hiring or scheduling procedures prescribed under B below; and the Contractor or subcontractor further agrees to take said action if it determines or is so notified by the Division that the union is not referring minority and women workers consistent with the applicable employment goal.

B. If the hiring or scheduling of a workforce consistent with the employment goal has not or cannot be achieved for each construction trade by adhering to the procedures of (A) above, or if the Contractor does not have a referral agreement or arrangement with a union for a construction trade, the Contractor or subcontractor agrees to take the following actions consistent with the applicable county employment goals;

1. To notify the public agency compliance officer, the Division, and minority and women referral organizations listed by the Division pursuant to N.J.A.C. 17:27-5.3, of its workforce needs, and request referral of minority and women workers;

2. To notify any minority and women workers who have been listed with it as awaiting available vacancies;

3. Prior to commencement of work, to request the local construction trade union, refer minority and women workers to fill job openings, provided the Contractor or subcontractor has a referral agreement or arrangement with a union for the construction trade;

4. To leave standing requests for additional referral to minority and women workers with the local construction trade union, provided the Contractor or subcontractor has a referral agreement or arrangement with a union for the construction trade, the State training and Employment Service and other approved referral sources in the area until such time as the workforce is consistent with the employment goal;

5. If it is necessary to lay off some of the workers in a given trade on the construction site, to assure, consistent with the applicable State and Federal statutes and court decisions, that sufficient minority and women employees remain on the site consistent

with the employment goal; and to employ any minority and women workers so laid off by the Contractor on any other construction site on which its workforce composition is not consistent with an employment goal established pursuant to rules implementing N.J.S.A. 10:5-31 et seq.;

6. To adhere to the following procedure when minority and women workers apply or are referred to the Contractor or subcontractor;

i. If said individuals have never previously received any document or certification signifying a level of qualification lower than that required in order to perform the work of the construction trade, the Contractor or subcontractor shall determine the qualifications of such individuals and if the Contractor's or subcontractor's workforce in each construction trade is not consistent with the applicable, employment goal, it shall hire or schedule those individuals who satisfy appropriate qualification standards. However, the Contractor or subcontractor shall determine that the individual at least possesses the requisite skills, and experience recognized by a union, apprentice program or a referral agency, provided the referral agency is acceptable to the Division. If necessary, the Contractor or subcontractor shall hire or schedule minority and women workers who qualify as trainees pursuant to these rules. All of the requirements, however, are limited by the provisions of (C) below.

ii. If the Contractor's or subcontractor's workforce is consistent with the applicable employment goal, the name of any interested women or minority individual shall be maintained on a waiting list for the first consideration, in the event the Contractor's or subcontractor's workforce is no longer consistent with the applicable employment goal.

iii. If, for any reason, said Contractor or subcontractor determines that a minority individual or a woman is not qualified or if the individual qualifies as an advanced trainee or apprentice, the Contractor or subcontractor shall inform the individual in writing of the reasons for the determination, maintain a copy of the determination in its files, and send a copy to the public agency compliance officer and to the Division.

iv. The Contractor or subcontractor shall interview the referred minority or women workers.

7. To keep a complete and accurate record of all requests made for the referral of workers in any trade covered by the contract, on forms made available by the Division and submitted promptly to the Division upon request.

C. The Contractor or subcontractor agrees that nothing contained in (B) above shall preclude the Contractor or subcontractor from complying with the union hiring hall or apprenticeship policies in any applicable collective bargaining agreement or union hiring hall arrangement, and, where required by custom or agreement, it shall send journeymen and trainees to the union for referral, or to the apprenticeship program for admission, pursuant to such agreement or arrangement. However, where the practices of a union or apprenticeship program will result in the exclusion of minorities and women or the failure to refer minorities and women consistent with the county employment goal, the Contractor or subcontractor

shall consider for employment persons referred pursuant to (B) above without regard to such agreement or arrangement; provided further, however, that the Contractor or subcontractor shall not be required to employ women and minority advanced trainees and trainees in numbers which result in the employment of advanced trainees and trainees as a percentage of the total workforce for the construction trade, which percentage significantly exceeds the apprentice to journey worker ratio specified in the applicable collective bargaining agreement, or in the absence of a collective bargaining agreement, exceeds the ratio established by practice in the area for said construction trade. Also, the Contractor or subcontractor agrees that, in implementing the procedures of (B) above, it shall, where applicable, employ minority and women workers residing within the geographical jurisdiction of the union.

After notification of award, but prior to signing a construction contract, the Contractor shall submit to the public agency compliance officer and the Division an initial project workforce report (Form AA 201) provided to the public agency by the Division for distribution to and completion by the Contractor, in accordance with N.J.A.C. 17:27-7. The Contractor also agrees to submit a copy of the Monthly Project Workforce Report once a month thereafter for the duration of this Contract to the Division and to the Public Agency Compliance Officer.

D. The Contractor and its subcontractors shall furnish such reports or other documents to the Division of Contract compliance & EEO as may be requested by the Division from time to time in order to carry out the purposes of these regulations, and public agencies shall furnish such information as may be requested by the Division of Contract Compliance & EEO for conducting a compliance investigation pursuant to Subchapter 10 of the Administrative Code at N.J.A.C. 17:27-1 et seq.

Article XIX - WORKER AND COMMUNITY RIGHT-TO-KNOW ACT (N.J.S.A. 34:5A-1 et seq.; N.J.A.C. 7:1G):

This Act requires employers to label all containers of hazardous substances. All goods offered for purchase to the Commission must be labeled in compliance with the provisions of this Act.

Material Safety Data Sheets also must be supplied as is required by law.

Article XX - SAFETY:

All equipment and work methods utilized in this Contract shall comply with O.S.H.A. and any other applicable local, State and Federal safety standards and regulations.

Article XXI – TAX EXEMPTION:

Purchases made by the Commission are exempt from payment of state sales taxes, and such tax shall not be included in the price for the work for the project.

Article XXII – DISPUTE RESOLUTION:

A. **NOTICE** – Written notice stating the general nature of each Claim, dispute, or other matter shall be delivered by the Contractor to the Commission's Executive Director promptly (but in no event later than thirty (30) days) after the start of the event giving rise thereto. Notice of the amount or extent of the claim, dispute, or other matter with supporting data shall be delivered to the Commission's Executive Director within sixty (60) days after the start of such event (unless the Executive Director allows additional time to submit additional or more accurate data in support of such Claim, dispute, or other matter). Any claim for an adjustment in Contract price and/or Contract time shall be prepared in accordance with the provisions of an official change order or contract amendment approved by the Board of Commissioners. Each Claim shall be accompanied by the Contractor's written statement that the adjustment claimed is the entire adjustment to which the Contractor believes it is entitled as a result of said event. The Commission will respond to the Contractor within sixty (60) days after receipt of the Contractor's last submittal.

B. APPEAL FROM BOARD OF COMMISSIONER'S DECISION – The Contractor may appeal the Board of Commissioner's decision rendered pursuant to the above Notice by delivering to the Commission within thirty (30) days after the date of such decision, a written notice of intention to appeal. The date of receipt of such notice by the Board of Commissioner's shall be the date upon which the time periods in these dispute resolution proceedings are calculated.

C. WORK CONTINUANCE AND PAYMENT – Unless otherwise agreed in writing, the Contractor shall continue to work, furnish required equipment and maintain the Schedule of the Work as outlined in the contract specifications during any dispute resolution proceedings. If Contractor continues to perform per the contract specifications, the Commission shall continue to make payments in accordance with this Contract.

D. INITIAL DISPUTE RESOLUTION – Upon issuance of a written notice of intention to appeal, the parties shall endeavor to settle the dispute first through direct discussions. The senior executives of the parties, who for the Contractor shall have the authority to settle the dispute and for the Commission shall be the Executive Director, shall meet within twenty-one (21) days after the date of receipt by the Commission of the notice of intention to appeal**.** If the dispute is not settled within thirty (30) days from the referral of the dispute to the senior executives, the parties shall submit the dispute to mediation in accordance with Paragraph E.

E. MEDIATION – If the dispute cannot be settled pursuant to Paragraph D, the parties shall endeavor to settle the dispute by mediation under the current Construction Industry Mediation Rules of the American Arbitration Association before recourse to any other dispute resolution procedures. Once one party files a request for mediation with the

other party and with the American Arbitration Association, the parties agree to conclude such mediation within one hundred twenty (120) days of filing of the request.

The Commission and the Contractor shall cooperate with American Arbitration Association and with each other in selecting a mediator from American Arbitration Association, panel of neutrals and in scheduling the mediation proceedings. The Commission and the Contractor shall participate in the mediation in good faith, and shall share equally in its costs. All communications, documents, and other materials, whether written or oral, made in the course of or relating to the mediation by the Commission or the Contractor, or their agents, employees, experts or attorneys, or by the mediator or American Arbitration Association, employees, are confidential and privileged, and inadmissible for any purpose in any court, administrative, or other proceeding, provided that evidence that is otherwise admissible or discoverable shall not be rendered inadmissible or non-discoverable as a result of its use in the mediation. This agreement to mediate and any other agreement or consent to mediate entered into in accordance herewith as provided herein will be specifically enforceable under the laws of the State of New Jersey.

Either party may terminate the mediation at any time after the first session but the decision to terminate shall be delivered in person by the party's representative to the other party's representative and the mediator.

F. MULTIPARTY PROCEEDINGS – All parties necessary to resolve a claim or dispute shall be parties to the same dispute resolution proceeding. Appropriate provisions shall be included in all other contracts relating to the work in accordance with the Contract to provide for the consolidation of such dispute resolution procedures.

G. CONCLUSION OF MEDIATION – In the event that mediation is concluded without a resolution of the dispute, Contractor and Commission may exercise such rights and remedies as either may otherwise have under the Contract Documents or by applicable law in respect of any dispute.

H. If, in the sole opinion of the Commission, a dispute arises which imperils the timely completion of the work, an excessive increase in costs, a substantial risk of harm to the public health or welfare, or an emergency or exigency which must be addressed immediately, then the Commission may institute court, administrative, or other proceedings without prior compliance with the dispute resolution provisions contained in this Contract.

ARTICLE XXIII – COMPLIANCE WITH COMMISSION CONTRACT AWARD POLICIES:

POLITICAL CONTRIBUTIONS

On April 3, 2023, Governor Murphy signed the Elections Transparency Act (ETA),

N.J.S.A 19:44A-20.13 to 20.25 into law. He subsequently issued Executive Order (EO) 333 which amended prior Eos to align with the newly-enacted ETA. Contractor represents that he is in compliance with the ETA disclosure requirements.

Article XXIV – BUSINESS REGISTRATION CERTIFICATE

A. Business Registration: Pursuant to N.J.S.A. 52:32-44, **NORTH JERSEY DISTRICT WATER SUPPLY COMMISSION** is prohibited from entering into a contract with an entity unless the bid/proposal/contractor, and each subcontractor that is required by law to be named in a bid/proposal/contract has a valid Business Registration Certificate on file with the Division of Revenue and Enterprise Services within the Department of Treasury.

B. Prior to contract award or authorization, the Contractor shall provide the Commission with its proof of business registration and that of any named subcontractor(s).

C. Subcontractors named in a bid or other proposal shall provide proof of business registration to the Contractor, who in turn, shall provide it to the Commission prior to the time of the Contract, purchase order or other contracting documents is awarded or authorized.

D. During the course of contract performance:

(1) the Contractor shall not enter into a contract with a subcontractor unless the subcontractor first provides the Contractor with a valid proof of business registration.

(2) the Contractor shall maintain and submit to the Commission a list of subcontractors and their addresses that may be updated from time to time.

(3) the Contractor and any subcontractors providing goods or performing services under the Contract, and each affiliates, shall collect and remit to the Director of Division of Taxation in the Department of Treasury, the use tax due pursuant to the Sales and Use Tax Act, (N.J.S.A. 54:32B-1 et.seq.) on all sales of tangible personal property delivered to the State. Any questions in this regard can be directed to the Division of Taxation at (609)2925-6200. Form NJ-REG can be filled out at www.state.nj.us/treasury/revenue/busregcert.html.

E. Before final payment is made under the Contract, the Contractor shall submit to the Commission a complete list of all subcontractors and their addresses.

F. Pursuant to N.J.S.A. 54:49-4.1, a business organization that fails to provide a copy of a business registration as required, or that provides false business registration information, shall be liable for a penalty of $25 for each day of violation, not to exceed $50,000, for each proof of business registration not properly provided under a contract with a contract agency.

Article XXV – PUBLIC CONTRACTOR REGISTRATION

N.J.S.A. 34:11-56.48 et seq., requires that a general or prime contractor and any listed subcontractors named in the contractor's bid proposal shall possess a certificate at the time the bid proposal is submitted. After the bid proposal is received and prior to award of contract, the Contractor shall submit a copy of the contractor's certification along with those of all listed subcontractors. All non-listed subcontractors and lower tier subcontractors shall be registered prior to starting work on the project. It is the general contractor's responsibility that all non-listed subcontractors at any tier have their certificate prior to starting work in accordance with this Contract .

Under the law a "contractor" is "a person, partnership, association, joint stock company, trust, corporation or other legal business entity or successor thereof who enters into a contract" which is subject to the provisions of the New Jersey Prevailing Wage Act (N.J.S.A. 34:11-56.25, et seq.) It applies to contractors based in New Jersey or any other state.

To register, a contractor must provide the State Department of Labor with a full and accurately completed application form. The form is available online at www.state.nj.us/labor/lsse/lspubcon.html. N.J.S.A. 34:11-56.55 specifically prohibits accepting applications for registration as a substitute for a certificate of registration.

ARTICLE XXVI – NEW JERSEY ANTI-DISCRIMINATION

Pursuant to N.J.S.A. 10:2-1, the Contractor agrees that:

a. In the hiring of persons for the performance of work under this Contract or any subcontract hereunder, or for the procurement, manufacture, assembling or furnishing of any such material, equipment, supplies or services to be acquired under this Contract, no contractor, nor any person acting on behalf of such contractor or subcontractor , shall, by reason of race, creed, color, national origin, ancestry, marital status, gender identity or expression, affectional or sexual orientation or sex, discriminate against any person who is qualified and available to perform the work to which the employment relates;

b. No contractor, subcontractor, nor any person on his behalf, shall in any manner, discriminate against or intimidate any employee engaged in the performance of work under this Contract or any subcontract hereunder, or engage in the procurement, manufacture, assembling or furnishing of any such materials, equipment, supplies or services to be acquired under such contract, on account or race, creed, color, national origin, ancestry, marital status, gender identity or expression, affectional or sexual orientation or sex;

c. There may be deducted from the amount payable to the Contractor by the Commission , under this Contract, a penalty of $50.00 for each person for each calendar day which such a person is discriminated against or intimidated in violation of the provisions of the Contract; and

d. This Contract may be canceled or terminated by the Commission , and all money due to become due hereunder may be forfeited, for any violation of this section of the Contract occurring after notice to the Contractor from the Commission of any prior violation of this section of the Contract.

Article – XXVII AMERICAN WITH DISABILITIES ACT 1990

The Contractor and the Commission do hereby agree that the provisions of Title 11 of the Americans with Disabilities Act of 1990 (the "Act") *(42 U.S.C. S121 01 et seq.),* which prohibits discrimination on the basis of disability by public entities in all services, programs, and activities provided or made available by public entities, and the rules and regulations promulgated pursuant there unto, are made part of this Contract. In providing any aid, benefit, or service pursuant to this Contract, the Contractor agrees that the performance shall be in strict compliance with the Act. In the event that the Contractor, its agents, servants, employees, subcontractors violate or are alleged to have violated the Act during the performance of this Contract, the Contractor shall defend the Commission in any action or administrative proceeding commenced pursuant to the Act. The Contractor shall indemnify, protect, and save harmless the Commission , it agents, servants, and employees from and against any and all suits, claims, losses, demands, or damages, of whatever kind of nature arising out of or claimed to arise out of the alleged violation. The Contractor shall, at its own expense, appear, defend, and pay any and all charges for legal services and any and all costs and other expenses arising from such action or administrative proceeding or in connection therewith. In any and all complaints brought pursuant to the Commission's grievance procedure, the Contractor agrees to abide by any decision of the Commission which is rendered pursuant to said grievance procedure. If any action or administrative proceeding results in an award of damages against the Commission , or if the Commission incurs any expense to cure a violation of the ADA which has been brought pursuant to its grievance procedure, the Contractor shall satisfy and discharge the same at its own expense.

The Contractor shall, as soon as practicable after a claim has been made against it, give written notice thereof to the Contractor along with full and complete particulars of the claim, if any action or administrative proceeding is brought against the Commission or any of its agents, servants, employees, the owner shall expeditiously forward to the Contractor every demand, complaint, notice, summons, pleading, or other process received by the Commission or its representatives.

It is expressly agreed and understood that any approval by the Commission of the services provided by the Contractor pursuant to this Contract will not relieve the Contractor of the obligation to comply with the Act and to defend, indemnify, protect, and save harmless to the pursuant to this paragraph.

It is further agreed and understood that the Commission assumes no obligation to indemnify or save harmless the Contractor, its agents, servants, employees and subcontractors for any claim which may arise out of their performance of this Contract. Furthermore, the Contractor expressly understands and agrees that the provisions of this indemnification clause shall in no way limit the Contractor's obligations assumed in this Contract, nor shall they be construed to relieve the Contractor from any liability, nor preclude the Commission from taking any actions available to it under any other provisions of the Contract or otherwise at Law.

Article XXVIII – DISCLOSURE OF INVESTMENT ACTIVITIES IN IRAN

Pursuant to Public Law 2012, c. 25, the Contractor shall complete the certification attached hereto to attest, under penalty of perjury, that neither the person or entity, nor any of its parents, subsidiaries, or affiliates, is identified on the Department of Treasury's Chapter 25 list as a person or entity engaging in investment activities in Iran. The Chapter 25 list is found on the Division's website at http://www.state.nj.us/treasury/purchase/pdf/Chapter25List.pdf. The Contractor must review this list prior to completing the below certification. If the Director finds a person or entity to be in violation of law, s/he shall take action as may be appropriate and provided by law, rule or contract, including but not limited to, imposing sanctions, seeking compliance, recovering damages, declaring the party in default and seeking debarment or suspension of the party.

Article XXIX - DIANE B. ALLEN EQUAL PAY ACT

Pursuant to N.J.S.A. 34:11-56.14, a contractor performing "qualifying services" or "public work" to the State or any agency or instrumentality of the State shall provide the Commissioner of Labor and Workforce Development a report regarding the compensation and hours worked by employees categorized by gender, race, ethnicity, and job category. For more information and report templates see https://nj.gov/labor/equalpay/equalpay.html.

Article XXX - Disabled Veteran-Owned Business Set-Aside

In accordance with the New Jersey Set-Aside Act for Disabled Veterans' Businesses, N.J.S.A. 52:32-31.1 et seq. (P.L. 2015, c. 116) it is the policy of the Commission that Disabled Veteran-Owned Business (DVOBs), as determined and defined by the State of New Jersey, Department of the Treasury, Division of Revenue and Enterprise Services ("Division") in N.J.A.C. 17:14-1.1 et seq., have the opportunity to compete for and participate in the performance of contracts and subcontracts for services in accordance with the New Jersey Set-Aside Act for Disabled Veteran's Businesses, N.J.S.A. 52:32-31.1 et seq. (P.L. 2015, c. 116). The Commission further requires that its contractors shall agree to take all necessary and responsible steps, in accordance with the aforementioned regulations, to ensure that DVOBs have these opportunities.

This language is included to ensure that all persons who enter into any form of contractual agreement with the Commission, are aware of their responsibilities and the commitment of the Commission to see that its Disabled Veteran-Owned Business Set-Aside Program ("Program") is carried out in all instances.

The Contractor agrees to make a good faith effort to award at least 3% of this Contract to Subcontractors registered by the Division as a DVOB firm. Subcontracting goals do not apply if the prime Contractor is a registered DVOB firm.

The following actions shall be taken by a bidder in establishing a good faith effort to solicit and award subcontracts to eligible disabled veteran-owned businesses, as established in the RFB or RFP:

1) The bidder shall attempt to locate qualified potential disabled veteran-owned business subcontractors;

2) The bidder shall consult the disabled veteran business database if none are known to the bidder;

3) The bidder shall keep a record of its efforts, including the names of businesses contacted and the means and results of such contacts, as well as documentation on any good faith efforts to solicit and award any subcontract to an eligible disabled veteran-owned business; and

4) The bidder shall provide all potential subcontractors with detailed information regarding the specifications.

Bidders and responders shall in all respects comply with the requirements of Attachment 5 governing the DVOB Program.

Article XXXI – SAFETY MEASURES

All equipment and work methods utilized in this Contract shall comply with OSHA and all other applicable local, state and/or federal safety standards and regulations. Contractor and all subcontractors shall be required to attend a general Contract Safety Orientation prior to beginning construction.

Article XXXII – SECURITY MEASURES

The following measures must be adhered to as it relates to this contract:

1. The Contractor shall furnish a complete description of all equipment and vehicles that will enter onto Commission property. All equipment and vehicles will have ID or plate/tag numbers easily visible.

2. As required by the New Jersey Office of Counter Terrorism's Best Management Practices, Contractors must provide evidence that it has previously conducted a background check on all Contractor's employees who will be entering onto Commission property. Contractors shall provide the Commission with a corporate letter, on appropriate letterhead, stating the names of all employees who will require access to the Commission's property, and indicating that such background checks have, in fact, been performed. All subcontractors are also required to provide such employee list, and confirmation of background checks.

   NO ONE WILL BE ALLOWED ONTO COMMISSION PROPERTY WITHOUT PRIOR APPROVAL.

3. No specialized individuals will be allowed onto Commission property without being previously approved. This includes mechanics, fuel deliveries, sanitary facility maintenance, etc. The **"Access Approval Form to Commission Facilities"** (Attachment #1) must be filled out completely, with a copy of **GOOD QUALITY PHOTO ID**, and submitted to the Commission at least **twenty-four (24) hours** prior to arrival. This form **MUST** be completed for **every** visit or delivery. Liquid delivery may be subject to sampling prior to entering onto Commission property. The Contractor shall make no claim against the Commission for loss of time associated with complying with this requested time frame.

4. Only the approved Contractor's employees and employees of any subcontractor listed by the Contractor on **page (I-25)** of the Bid Documents, and approved equipment will be allowed on Commission property.

5. Vehicles entering onto Commission property shall be subject to search.

NOTE: THE COMMISSION SHALL HAVE THE RIGHT TO EXPAND SECURITY REQUIREMENTS AND CONTRACTOR SHALL MAKE NO CLAIMS AGAINST THE COMMISSION FOR INCREASED SECURITY REQUIREMENTS MADE DURING THE LIFE OF THIS CONTRACT.

Article XXXIII – PROMPT PAYMENT OF CONSTRUCTION CONTRACTS ACT

On September 1, 2006, the New Jersey Legislature passed the Prompt Payment of Construction Contracts Act, P.L. 2006, c.96.

P.L. 2006, c.96, provides, in part, as follows: If a prime contractor has performed in accordance with the provisions of a contract with the Commission and the billing for the work has been approved and certified by the Commissionor the Commission's authorized approving agent, the Commission shall pay the amount due to the prime contractor for each periodic payment, final payment or retainage monies not more than thirty (30) calendar days after the billing date, which for a periodic billing, shall be the periodic billing date specified in the Contract. The billing shall be deemed approved and certified twenty (20) days after the Commission receives it unless the Commission provides, before the end of the 20-day period, a written statement of the amount withheld and the reason for withholding payment, except that in the case of a public or governmental entity that requires the entity's governing body to vote on authorizations for each periodic payment, final payment or retainage monies, the amount due may be approved and certified at the next scheduled public meeting of the entity's governing body, and paid during the entity's subsequent payment cycle, provided this exception has been defined in the bid specifications and contract documents.

As a public entity that requires the authorization of its governing body for periodic or final payments, and payments for change orders or release of retainage, the Commission hereby places the prime contractor on notice that it not subject to the twenty (20) day period for the approval and certification of billings and, consistent with P.L. 2006, c. 96, in the event that the Commission is unable to obtain formal consideration and approval of any billing for work performed by a prime contractor as the basis for a periodic or final payment, or payments for change orders or retainage within the thirty (30) day time period mandated by P.L. 2006, c.96, the Commission shall place the billing for work performed on its next regularly scheduled meeting of its Board of Commissioners and, should such billing for work performed be approved, pay the approved amount to the prime contractor during the Commission's subsequent payment cycle.

Article XXXIV – CONFIDENTIALITY & NON-DISCLOSURE REQUIREMENTS:

The Contractor shall hold in trust and not reveal to any third party, except as provided in this Contract, between the Commission and the Contractor, any and all confidential or "Security Related" information as defined herein. The Contractor shall require its employees and sub-contractors to comply with the provisions of this Contract, if applicable, as it pertains to confidentiality. This Section must be included in all subcontracts entered into by the

Contractor. Confidential or "Security Related" information shall include:

- Any and all financial, statistical, personnel and/or technical data supplied to the Contractor.
- Any and all data, technical information, material gathered, originated, developed, prepared, used or obtained in the performance of this Contract, including results and opinions of the Contractor.
- Any and all communications between the Commission and the Contractor and the Contractor and any third party regarding the performance of this Contract.

The Contractor is required to protect the confidentiality of such data. Any use, copying, distribution, sale or offering of this data in any form by the Contractor, or any individual or entity in the Contractor's charge or employ for purposes not connected with this Contract, will be considered a violation of this Contract and may result in contract termination and the Contractor's suspension or debarment from State contracting. In addition, such conduct may be reported to the State Attorney General for criminal prosecution to the extent allowed by law.

It is further agreed that any information supplied by the Commission to the Contractor and any information developed by the Contractor in satisfaction of the Scope of Work within this Contract is subject to the following conditions and restrictions:

- Information received from or developed for the Commission is to be used solely for the purpose(s) established in this Contract.
- The data confidentiality matters coming within this Contract shall continue beyond the completion of all work involved in this Contract, unless specifically waived in writing by the Commission.

Article XXXV – GENERAL WARRANTY & GUARANTEE:

A. In addition to other promises and warranties contained herein, the Contractor warrants that the labor and materials to be furnished and installed under this Contract will be new and free from defects in material and workmanship for a period of **one year from the date of completion by the Contractor**. This warranty excludes damage or defect caused by abuse, modification, normal wear and tear, or improper maintenance or operation by persons other than the Contractor, its employees, subcontractors, or any other individual the Contractor utilizes to discharge its obligations under this Contract. In the event that the Commission determines, in its sole discretion, that the equipment furnished by the Contractor has failed prematurely or contains a defect in material or workmanship, then the Contractor shall repair or replace said defective free of charge and install said equipment free of charge. The Contractor shall proceed to remedy such defects in material and workmanship within seven (7) days of receipt of

written notice from the Commission. All such replacement parts shall be shipped F.O.B., Commission's site.

B. The Contractor's obligation to perform and complete the work in accordance with the Contract Documents shall be absolute. None of the following will constitute an acceptance of the work that is not in accordance with the Contract Documents or a release of the Contractor's obligation to perform the work in accordance with the Contract Documents:

1. Observations by the Commission;
2. The making of any milestone or final payment;
3. The issuance of a certificate of Substantial Completion;
4. Use or occupancy of the work or any part thereof by the Commission;
5. Any review and approval of a Submittal;
6. Any inspection, test, or approval by others; or
7. Any correction of defective construction by the Commission.

Article XXXVI– APPLICABLE LAW:

This Contract shall be governed by the laws of the State of New Jersey without giving effect to principles of conflicts of law.

Article XXXVII – TERMINATION:

This Contract may be terminated by the Commission, with or without cause, upon three (3) days written notice to the Contractor. In the event of termination of this Agreement, the Commission shall only be responsible to pay the Contractor compensation for the services rendered up to the date of the Contractor's receipt of written notice of termination.

Article XXXVIII – NOTICES:

All notices, requests, demands and other communication provided for by this Contract shall be in writing and shall be deemed to have been given when mailed at any general branch United States Post Office enclosed in a certified postpaid envelope and addressed to the address of the respective party stated herein or to such changed address as the party may have fixed by notice.

Article XXXIX– NON-WAIVER:

GENERAL CONDITIONS

No delay or failure by either party in exercising any right under this Contract, and no partial or single exercise of that right, shall constitute a waiver of that or any other right.

Article XL– COUNTERPARTS:

This Contract may be executed in two (2) or more counterparts, each of which shall be deemed an original, but all of which together shall constitute one and the same instrument.

SIGNATURES ON THE FOLLOWING PAGE

CONTRACT #2127
CERTIFICATE OF ACKNOWLEDGMENT
FOR CONTRACTOR (CORPORATION)

IN WITNESS THEREOF, the parties hereto have caused this Contract to be duly and properly executed in duplicate this _____ day of _____ , 2024 copy, thereof to remain with the Commission and one to be delivered to the Contractor.

NORTH JERSEY DISTRICT
WATER SUPPLY COMMISSION

BY: _____
DR. HOWARD L. BURRELL, **CHAIRMAN**

ATTEST:

_____
KIM DIAMOND, COMMISSION SECRETARY

(CONTRACTOR)

BY: _____
(SIGNATURE)

_____
(TYPED SIGNATURE)

_____
(TITLE)

ATTEST/WITNESS:

*****_____ ***(*Witness must also complete page C-32)***
(SIGNATURE)

_____
(TYPED SIGNATURE)

_____
(TITLE)
SEAL:

C-31

CONTRACT #2127
CERTIFICATE OF ACKNOWLEDGMENT
FOR CONTRACTOR (CORPORATION)

STATE OF **}**
S.S.
COUNTY OF **}**

BE IT REMEMBERED, that on this _____ day of _____, 2024 before me, a Notary Public of the State of_____personally appeared *****_____ (Witness), who, being duly sworn, doth depose and make proof to my satisfaction, that he/she well knows the corporate seal of _____ Contractor named in the foregoing contract, that the seal affixed is the proper corporate seal of said Contractor, that the same was so affixed thereto and the said contract signed by _____who was at the date and execution thereof, the _____ of said company, in the presence of said deponent, as the voluntary act and deed of said company, and that the said deponent thereupon signed the same as subscribing witness.

_____
NOTARY PUBLIC

SWORN AND SUBSCRIBED TO BEFORE

ME THIS _____ DAY OF

_____, 2024.

*_____
WITNESS' SIGNATURE

_____
TYPED SIGNATURE

_____
TITLE

Please note – this page must be completed by the person who attested/witnessed the execution of the contract on page C-31.

CONTRACT #2127

CERTIFICATE OF ACKNOWLEDGEMENT
FOR CONTRACTOR (INDIVIDUAL)

STATE OF **}**
S.S.
COUNTY OF **}**

BE IT REMEMBERED, that on this _____ day of_____ ,2024 before me a Notary Public of the State of _____ personally appeared who being by me duly sworn, doth depose and make proof to my satisfaction, that he (she) is the Contractor named in the foregoing contract, and the said contract signed by him (her) voluntary act and deed.

(CONTRACTOR)

_____

_____
(TYPED SIGNATURE)

_____
NOTARY PUBLIC:

SWORN AND SUBSCRIBED TO BEFORE

ME THIS _____ DAY OF

_____ 2024.

CONTRACT #2127

CERTIFICATE OF ACKNOWLEDGEMENT
FOR COMMISSION

STATE OF **}**
S.S.
COUNTY OF **}**

BE IT REMEMBERED, that on this _____ day of _____, 2024 before me personally appeared **KIM DIAMOND**, (Commission Secretary) who being by me duly sworn, doth depose and make proof to my satisfaction, that she well knows the corporate seal of the North Jersey District Water Supply Commission, the Commission named in the foregoing contract, that the seal thereto affixed is the proper corporate seal of said Commission, that the same was so affixed thereto and the said contract signed by **DR. HOWARD L. BURRELL**, who was at the date and execution thereof, the Chairman of the North Jersey District Water Supply Commission, in the presence of the said deponent, as the voluntary act and deed of the said Commission, and that the said deponent thereupon signed the same as subscribing witness.

_____
KIM DIAMOND, COMMISSION SECRETARY

_____
NOTARY PUBLIC:

SWORN AND SUBSCRIBED TO BEFORE

ME THIS _____ DAY OF

_____ 2024

EXHIBIT "A"

TECHNICAL SPECIFICATIONS

SECTION 01 11 00

SUMMARY OF WORK

PART 1 GENERAL

1.01 SUMMARY

A. Section Includes: General description of Project and location.

1.02 SITE LOCATION

A. Project location is Wanaque, Passaic County, New Jersey.

B. Exact location of Project is as indicated on "Location Map" on first sheet of Drawings.

1.03 WORK COVERED BY CONTRACT DOCUMENTS

A. Without intending to limit or restrict extent of work required under this Contract, Work to be performed comprises the following:

1. Complete filter media replacement for one (1) 46.5’ x 60’ gravity filter – two filter cells per gravity filter, installation of an air scour piping, filter underdrain system replacement, add a larger air/vacuum release into the filter underdrain to protect anthracite loss, concrete repair, link seals on pipe penetration replacement, install 3” drain piping and drain valve, and replacement of three (3) valve actuators per filter. Additional filters may be required as indicated on the plans.

2. Provide without additional compensation, any apparatus, material and labor not specifically mentioned in specifications or indicated on Drawings, that is necessary to complete or perfect any portion of work in a substantial manner and in compliance with requirements implied or intended in these Contract Documents. This includes materials, devices or methods peculiar to the apparatus or system provided.

1.04 DRAWINGS

A. Project Drawings: The Drawings listed on the Cover Sheet of the set of Drawings accompanying this Project Manual are hereby made a part of the Contract. The Work relative to the Contracts is indicated in the set of Project Drawings. Each Contract is reliant upon all Project Drawings for the execution and coordination of the Work.

©Gannett Fleming Inc. 2023

1.05 MODIFICATIONS

A. Owner and Engineer reserve right to make changes in order and execution of Work done under Contract as, in judgement of Engineer, may be necessary or expedient to carry out intent of design and Contract.

1.06 PROFILES AND TOPOGRAPHY

A. Profiles, topography, and details for the work are schematic in nature and, with the exception of dimensioned construction details, are presented only for the purpose of conveying the concept and the limit of specified work. The Contractor shall verify all details in the field. The misuse of noted information for other than that indicated and subsequent suffering of damages as a result of misuse shall not be cause for any claim by the Contractor. Information is believed to be reasonably correct, but is not guaranteed.

1.07 PHYSICAL DATA

A. Become fully informed concerning location of public or private facilities and structures on, under, or over Project, which may interfere with operations. It is assumed Contractor has prepared bid and entered into Contract with full understanding of conditions to be encountered, and responsibilities in connection with that.

B. From investigations and field surveys, location of facilities and structures as have been brought to attention of Engineer are indicated on Drawings, but location of water, electric, gas, sewer, telephone lines, etc., and nature of materials is not guaranteed. Indication on Drawings of such facilities will not be assumed to relieve Contractor of any responsibility with respect to it nor will Owner or Engineer be held responsible for any omission or failure to give notice to Contractor of any other facility or structure on, under, or over Project, or presence of rock or unsuitable material.

1.08 ADJACENT PROPERTY AND RIGHT-OF-WAY

A. Do not trespass, store material or equipment or in any other manner occupy any property outside of the construction right-of-way, easements, construction clearing and grubbing limits, and highway right-of-way shown on the Drawings, without written permission of the owner of the property. Any damage done by the Contractor to property outside of said work areas shall be restored immediately to the property owner's satisfaction at the Contractor's expense.

1.09 UTILITY OWNERS

A. Do not operate, move, relocate, or in any way interfere with the operation of existing utilities at, near, or outside the work area without first contacting a qualified representative of the utility involved and obtaining a written approval from this representative.

©Gannett Fleming Inc. 2023

PART 2 PRODUCTS

NOT USED

PART 3 EXECUTION

NOT USED

END OF SECTION

©Gannett Fleming Inc. 2023

SECTION 01 12 16

WORK SEQUENCE

PART 1 GENERAL

1.01 SUMMARY

A. Section Includes: Requirements related to the schedule and sequence of construction, including selected work items deemed critical to construction progress and plant operations that are brought to the Contractor's attention. The schedules were prepared with available information and are intended as a guide in preparation of the final progress schedule, which must conform to the project requirements.

B. Related Sections:
   1. Schedules required to be submitted by the Contractor are specified in Section 01 33 00 - Submittal Procedures, and General Instructions. All schedules shall be submitted both in digital file and hard paper copy formats.
   2. Individual Specification Sections in these Contract Documents contain additional and special schedule requirements. Individual Sections shall take precedence in the event of a conflict with this Section.

1.02 SYSTEM DESCRIPTION

A. North Jersey District Water Supply Commissions owns and operates the water treatment plant in Wanaque, Passaic County, NJ. The water enters the plant and undergoes pre-mix, reaction basin, rapid mix, mixing basin, settling basin, filters, and then a clear well before the water is discharged to the transmission main system.

B. This schedule is intended to be utilized by the General Contractor and all subcontractors as a guide to the construction sequence and activity requirements that need to be coordinated by all contractors working on this site. It is the responsibility of the General Contractor to coordinate the activities of his subcontractors working on this site.

1.03 CONSTRUCTION SEQUENCE

A. Liquidated damages are set forth in the Specifications for exceeding the time limits for: A. Substantial Completion and B. Final Completion. Generally, this Contractor should construct all piping to the contract limits shown on the drawings within 240 days for the first filter, 90 days for each additional filter (assumed four (4) filters yields 510 days) of the Notice to Proceed on this Contract.

B. The Contractor shall submit to the Engineer for approval, construction details, detailed sequence, and schedule of operation for each connection to existing piping at least 30 days prior to beginning work on the connection in accordance with Section 01 33 00. Approval must be received before commencement of work.

©Gannett Fleming Inc. 2023

1.04 GENERAL DESCRIPTION OF CONSTRUCTION SEQUENCE

A. Total duration of the project = 240 + (Number of filters awarded –1)*90. If four filters are awarded, then 240 + (4-1)*90 = 510 days for full completion of the project from the day of Notice to Proceed

B. Restore disturbed areas.

C. Commission primary focus is on water treatment plant operations
   1. Filters will only be taken out of service once all materials for filter rebuild are on-site.
   2. Only 1 filter will be taken out of service at a time.
   3. Rehabilitated filters will require a test/evaluation period prior to the release of another filter. It is envisioned a 1-week period to evaluate filter and prove performance.

1.05 CRITICAL SCHEDULING ITEMS AND RESTRICTIONS

A. At this time there does not appear to be any critical scheduling items or restrictions related to the construction of this project.

PART 2 PRODUCTS

NOT USED

PART 3 EXECUTION

NOT USED

END OF SECTION

©Gannett Fleming Inc. 2023

SECTION 01 20 00

PRICE AND PAYMENT PROCEDURES

PART 1 GENERAL

1.01 MEASUREMENT

A. Measurement will be made on basis of completion of work in accordance with Contract Documents and as stated hereinafter.

B. Prices bid in the Bid Form constitute complete payment for Work of the Contract, which Work is as specified in the Contract Documents, Drawings, and Specifications. Item descriptions contained in this Section are not to be considered as all encompassing.

1.02 PAYMENT

A. Progress Payments: Payments will be made as stated in the Agreement, and at the Unit and/or Lump Sum Price(s) bid in the Bid Form, and in accordance with General Conditions Article 14.

B. Incidental Costs:
   1. Include in appropriate pay items cost for:
      a. Labor.
      b. Equipment.
      c. Materials.
      d. Transportation.
      e. Plant.
      f. Tools.
      g. Bonds and Insurance.
      h. Worker's Compensation.
      i. Licenses.
      j. Permits.
      k. Taxes.
      l. General Overhead.
      m. Profits.
      n. All other expenses necessary for prosecution of the work.
      o. Tests: Incidental to the appropriate pay items.
      p. Laboratory and Shop Tests.
      q. Hydrostatic and Leakage Tests.
      r. Painting Tests.
      s. Material and Equipment Tests.
      t. Mechanical & Process Performance Tests.
      u. Mechanical Systems Cleaning, and Flushing.

©Gannett Fleming Inc. 2023

1.03 LUMP SUM BID FORM

A. General: The Lump Sum Price bid in the Bid Form constitutes complete payment for Work of the Contract, which Work is as specified in the Contract Documents.
   1. Work and services of an administrative nature, as may be specified in the various Sections of the Specifications, and not referenced in this Measurement and Payment statement or in Lump Sum Bid Form, is considered incidental to the entire Work of the Contract and no separate or additional payment will be paid for such.
   2. The Lump Sum Price bid in the Bid Form is considered to be the bid amount for the entire Work involved in the Contract. The necessary appurtenance equipment, adjoining or attached structures and construction features, piping systems, and materials and construction operations not mentioned herein are considered incidental to the Work, and as such, must be included in the applicable Bid price.

END OF SECTION

©Gannett Fleming Inc. 2023

SECTION 01 25 13

PRODUCT SUBSTITUTION PROCEDURES

PART 1 GENERAL

1.01 SUMMARY

A. Section Includes: General requirements for requesting product substitutions.

1.02 SUBMITTAL OF PROPOSED SUBSTITUTIONS

A. Items of equipment and/or materials made by manufacturers other than those specified and which Bidder feels are "equal" to specified items may be offered as substitutes to specified items. Submit proposed substitute item by listing at proper place on Bid Form or on Bidder's letterhead attached to Bid Form, together with total price difference of the substituted item to be deducted from the base bid price.

B. Except as specified hereinafter, no consideration will be given to substitutions offered after the opening of bids.

C. Submit with Bid Form full descriptive and technical data for each substitute item proposed. As an alternate to submitting full descriptive and technical data with bid, Bidder may have equipment supplier submit data to Owner in a properly marked envelope at Owner's office any time within the hour preceding bid opening. Consideration will not be given to proposed substitutes for which no descriptive or technical data are submitted either with bid or within the hour prior to bid opening.

D. Submit following data in order for substitution to be considered.
   1. Complete data substantiating compliance of proposed substitution with the Project Specifications and Drawings. Substitutions are not to change design intent.
   2. For Products:
      a. Product identification, including manufacturer's name and address.
      b. Manufacturer's literature, including but not necessarily limited to:
         1) Product description, performance and test data.
         2) Reference standards.
      c. Samples where appropriate.
      d. Name and address of similar projects on which product was used, date of installation, and name of Engineer.
   3. For Construction Methods:
      a. Detailed description of proposed method.
      b. Drawings illustrating methods.
      c. Name and address of similar projects on which method was used, date of use, and name of Engineer.
   4. Itemized comparison of proposed substitution with product or method specified. Different types of products and methods will be considered, provided final performance is at least equal to that specified.

©Gannett Fleming Inc. 2023

5. Data relating to impact on construction schedule occasioned by the proposed substitution.
6. Relation to separate contracts as to effect the proposed substitute has on their work.
7. Accurate cost data on proposed substitution in comparison with product or method specified, including costs of all redesigns required.
8. In making request for substitution, Bidder represents;
    a. He has personally investigated proposed product or method, and determined that it is equal or superior in all respects to that specified. He will provide the same guarantee for substitution as for product or method specified.
    b. He will coordinate installation of accepted substitution into work, making such design and construction changes as may be required for work to be complete in all respects.

E. Bidder must judge that such substitute equipment, materials and construction methods meet the requirements of the Specifications and are, in all respects, equal to the specified products. Changes to the submitted descriptive and technical data, equipment and/or materials and construction methods, and substitutes will not be allowed after the receipt of bids.

F. Engineer's decision regarding evaluation of substitutions is considered final and binding. Requests for time extensions and additional compensation based on submission of, acceptance of, or rejection of all substitutions will not be allowed.

G. Owner reserves right to accept or reject proposed substituted items.

H. When Contractor substitutes equipment and/or materials and construction methods which have been approved and accepted by Owner, the cost of any changes and/or additions required by the substitution of structure, pipe, electrical work, etc., will be borne by Contractor. This includes additional cost either to his own or other Contracts and the cost to Engineer in making changes in design or to Drawings.

I. Actual low bidder on the Contract will be determined on basis of low bids adjusted for the substitutions accepted by Owner.

1.03 SUBSTITUTIONS FOLLOWING AWARD OF CONTRACT

A. Requests for substitutions submitted after award of Contract will not be considered unless evidence is submitted to Engineer that the following circumstances exist:
    1. Unavailability of Specified Product:
        a. The specified product and/or material is unavailable for reasons beyond control of Contractor. Such reasons consist of strikes, bankruptcy, discontinuance of manufacture, or acts of God.
        b. Contractor placed, or attempted to place, orders for specified equipment, and/or material within a reasonable period after award of Contract.

©Gannett Fleming Inc. 2023

c. Request for such substitution is made in writing to Engineer within ten (10) days of date on which Contractor ascertains that he cannot obtain the item specified.
d. Complete data as set forth hereinbefore to permit complete analysis of the proposed substitution are submitted with request.

PART 2 PRODUCTS

NOT USED

PART 3 EXECUTION

NOT USED

END OF SECTION

©Gannett Fleming Inc. 2023

SECTION 01 26 16

REQUESTS FOR INFORMATION

PART 1 GENERAL

1.01 SUMMARY

A. Section Includes: General procedures for Contractors' requests for information (RFI's) during the construction phase of the project.

1.02 DEFINITIONS

A. Request for Information (RFI): A written question related to the meaning or intent of the construction documents submitted to the Engineer during construction that may result in a change order.

B. Prime Contractor: A contractor who has been awarded one or more of the contracts included in a project.

1.03 ELECTRONIC RFI DELIVERY

A. RFI's will be processed and delivered electronically through a web based collaborative project management system.

END OF SECTION

©Gannett Fleming Inc. 2023

REQUEST FOR INFORMATION

RFI Number:_____

To:	Christopher Olson	Project:	NJDWSC Filter Rehab
	Gannett Fleming, Inc.		
	GF Project No. 72743	Contract:	
From:	(Contractor)	Reference:	
	(address)	Spec. Section:	
Date:		Drawing No:	

Request:

Attachments:

Requested By:

Signed: _____ **Date:** _____

Please Respond By: _____

Response:

Attachments:

Responded By:

Signed: _____ **Response/Return Date:** _____

Copies To: xxxxx
RFI Log

SECTION 01 31 19

PROJECT MEETINGS

PART 1 GENERAL

1.01 SUMMARY

A. Section Includes: General requirements for scheduling and attending project meetings.

1.02 PROGRESS MEETINGS

A. General: Contractor is alerted to importance of coordination and cooperation among him and his Subcontractors and other Contractors. It is essential to expeditious completion of Work of this Project that Contractor, his Subcontractors and other Contractors meet at an early stage in Work for following reasons:
   1. Allocating space requirements in areas where installations are in close proximity, or are likely to be in conflict or interfere one with other.
   2. Scheduling regular meetings as Shop Drawings are developed.

B. Purpose: Regular meetings are for purpose of modifying work schedules and to arrive at an orderly sequence of operations agreeable to Contractors. Meetings also serve to resolve conflicts and adjust work arrangements to avoid work stoppages and delays, and for purpose of preparing coordination drawings for use and guidance of each Contractor.

C. Scheduling Additional Meetings: In addition to regularly scheduled meetings, Engineer may schedule a meeting or Contractor may request Engineer to schedule a meeting. Contractor may initiate latter type meeting by addressing a request to Engineer. Engineer will give to Contractor written notice of time and place, and agenda of each scheduled meeting.

D. Meeting Representation:
   1. Contractor, major Subcontractors and other contractors to provide representation at meetings by a person or persons vested with authority to make necessary decisions on behalf of Contractor, Subcontractors and other contractors, and commit Contractors to agreed procedures, sequence of operations and time schedules.
   2. Failure to be represented at meetings (when scheduled by Engineer) will subject absent Contractor to liability for damages, delays, costs of alterations, which may result from no representation to coordinate his work with work that was scheduled, arrangements agreed upon, or procedures developed at meeting (or meetings) in question.
   3. It is emphasized that above requirement will be strictly enforced by Owner and an offending Contractor held to strict accountability for failure to attend and effectively participate in Progress Meetings.

©Gannett Fleming Inc. 2023

E. Where procedures, sequence of operations, time schedules and other matters have been agreed upon by Contractors concerned, Contractors are bound to follow and comply with agreement and no claim of delay or damages by Contractor if he fails to comply considered by Owner.

F. Engineer will prepare documentation of meeting minutes and distribute copies to Contractors and Subcontractors attending meeting.

PART 2 PRODUCTS

NOT USED

PART 3 EXECUTION

NOT USED

END OF SECTION

©Gannett Fleming Inc. 2023

SECTION 01 32 00

CONSTRUCTION PROGRESS DOCUMENTATION

PART 1 GENERAL

1.01 SUMMARY

A. Section Includes: General requirements for construction schedule and reporting progress.

1.02 ORDER OF WORK

A. Commence work promptly and continue at locations, in order, and at times most expedient to completion of Work. Perform work with safety during all stages of construction, and complete in accordance with schedule. Owner reserves right to direct that certain portions of work be commenced and completed before work on other portions is started.

1.03 CHART FORM CONSTRUCTION SCHEDULE

A. Within 30 days after issuance of the Notice To Proceed, prepare and submit to Engineer for review, a schedule showing the order proposed to carry on the work and dates proposed to start and complete each salient feature, including dates for procurement of materials, plant and equipment and schedule for submission of Shop Drawings.

B. Prepare schedule of work in chart form showing contemplated completion percentages and arranged to record actual completion percentages at stated intervals.

C. Keep schedule of work up to date, and submit current updated schedule to Engineer monthly.

D. Schedule of Work determines the order in which work is to proceed. Engineer, however, may order and authorize minor changes to schedule when such changes are of advantage to Owner.

E. Furnish sufficient forces, construction equipment and plant as necessary to ensure the prosecution and completion of work in accordance with submitted schedule. Increase forces and plant and request from Engineer an increase in working hours if falling behind progress shown on schedule. If, in opinion of Engineer, such increases are necessary for completion of work in accordance with terms of Contract, they will be approved. Failure to comply with requirements of Engineer may be grounds for determination by Engineer that Contractor is not proceeding at such rates as will ensure completion within specified time and may result in declaring Contractor to be in default.

©Gannett Fleming Inc. 2023

PART 2 PRODUCTS

NOT USED

PART 3 EXECUTION

NOT USED

END OF SECTION

©Gannett Fleming Inc. 2023

SECTION 01 33 00

SUBMITTAL PROCEDURES

PART 1 GENERAL

1.01 SUMMARY

A. Section Includes: General procedures and requirements for submittals.

B. Related Sections:
   1. Construction Progress Documentation: Section 01 32 00.
   2. Operation and Maintenance Data: Section 01 78 23.

1.02 DEFINITIONS

A. The term shop drawing used throughout this Section and the Contract Documents includes manufacturer's product data, Shop Drawings, samples and certificates.
   1. Product Data: Manufacturer's descriptive literature, product specifications, performance and capacity rating schedules, published details, and installation instructions.
   2. Shop Drawings: Contractor or manufacturer prepared, completely dimensioned and annotated detail drawings of the products presented.
      a. Shop Drawings shall include locations of services connections, internal and external power and control wiring diagrams, systems connections, anchor bolt layout and details of materials and construction.
      b. Shop Drawings shall include mechanical information such as diameter of shafting, rated horsepower of motors, gear and bearing ratings, service factors and weights of principal parts as well as the completely assembled equipment.
      c. Shop Drawings shall include elevation views of control panels identifying face-mounted and internally-mounted components.
      d. Where specified, Shop Drawings shall include process and instrumentation diagrams employing Instrument Society of America symbols and nomenclature to identify control system function and components.
      e. Shop Drawings shall also include Contractor prepared layout and setting drawings as necessary to illustrate the assembly of various elements of the Work.
   3. Samples: Contractor or manufacturer prepared and delivered physical samples as requested in the various Specifications Sections.
   4. Certificates: Contractor or manufacturer prepared written instruments certifying product compliance with the Project Manual and Drawings. The written instruments shall include test records or reports, and such other types of certificates as required by the Specifications.

©Gannett Fleming Inc. 2023

1.03 SUBMISSIONS REQUIRED

A. General: Descriptions under Submittals Article in each Specifications Section indicates type of submission required.

1.04 SCHEDULE OF SUBMITTALS AND MATERIALS LIST

A. Schedule of Submittals: Submit a progress schedule of submittals to the Engineer for approval in accordance with General Conditions Article 2.05 E. Indicate in such schedule the proposed dates of submissions and the quantity for the various types of Work. Arrange submission dates in the proper sequence of the importance of the Work to the progress of construction.

B. Materials List: Submit the statement of origin, composition and manufacture of materials (Materials List) referred to in General Conditions Article 6.03.

1.05 CONSTRUCTION PROGRESS SCHEDULE

A. Provide a Schedule of Work in chart form, in accordance with Section 01 32 00.

1.06 SUBMISSION OF SHOP DRAWINGS

A. Submittals shall be processed and delivered electronically through a web based collaborative project management system except for the following:
   1. Samples and color selections shall be delivered by mail or courier to the Engineer for review. Make submissions to the mailing address of the Engineer.
   2. Final hard copies of O&M Manuals shall be delivered by mail or courier to the Engineer in accordance with Section 01 78 23. Review copies shall be submitted electronically.

B. After review by the Engineer, Shop Drawings will be returned marked as follows: Conforms; Conforms as Noted; Non-Conforming - Revise and Resubmit; or No Review Required.
   1. Conforms: When Shop Drawings are returned Conforms, it is understood that the Shop Drawings have been found to be in conformance with the Contract Documents. The Engineer's review of the Shop Drawings for conformance does not relieve the Contractor from responsibility for errors or discrepancies in such Shop Drawings.
   2. Conforms as Noted: When Shop Drawings are returned Conforms as Noted, it is understood that the Shop Drawings have been found to be in conformance with the Contract Documents, provided the changes noted by the Engineer are incorporated in the Shop Drawings. Shop Drawings returned Conforms as Noted will not require resubmission unless noted on the return transmittal.
   3. Non-Conforming-Revise and Resubmit: When Shop Drawings are returned noted Non-Conforming-Revise and Resubmit, it is understood that the Contractor shall make the required corrections and resubmit corrected Shop Drawings to Engineer in accordance with Paragraph A. above. No fabrication is allowed.

©Gannett Fleming Inc. 2023

4. No Review Required: When Shop Drawings are returned No Review Required, it means receipt is acknowledged and no review is required.

C. Working Drawings for Changes, Substitutions or Contractor Design Items:
   1. Have working drawings and calculations certified by a Professional Engineer registered in the State of New Jersey accompanied by calculations or other sufficient information to completely explain proposed method of construction, including but not limited to type of machinery and method proposed. Submit design calculations with working drawings.
   2. Review for conformance of working drawings by Engineer does not relieve Contractors responsibility with regard to fulfillment of terms of Contract. Contractor to assume risk of error, with no responsibility by Engineer.

D. Identification:
   1. Data: Provide following identification data, as applicable, contained or permanently adhered to submittals for review and acceptance.
      a. Owner's contract number/name. (See attached suggested sample)
      b. Project name and location.
      c. Number each Shop Drawing using Specification Section numbers followed by 1.0, 2.0, 3.0, etc. for each submittal within a Section. Resubmittals must include .1, .2, .3, etc. in addition. For example, if the fifth item submitted in Section 03 30 00 is returned for correction three times, the next resubmittal number will be 03 30 00-5.3.
      d. Product identification.
      e. Shop Drawing title, product, drawing number, revision number, date of drawing and revision.
      f. Applicable Contract Drawings and Specification Section numbers.
      g. Subcontractor's, vendor's, and/or manufacturer's name, address and phone number.
      h. Contractor's certification statement.
   2. Catalog Data: Furnish each separate catalog, brochure, or single page submitted with identification required above.
      a. Catalogs or brochures submitted containing multiple items for review need identification only on exterior. In this instance, identification to include page and catalog item numbers.
   3. Space: Provide vacant space approximately 3 inches high by 4 inches wide adjacent to identification data to receive Engineer's status stamp.

E. Contractor's Responsibility:
   1. Affix following signed Certification Statement to each Shop Drawing, working drawing, sample and catalog data submitted:
      a. Certification Statement: By this submittal, I hereby represent that I have determined and verified field measurements, field construction criteria, materials, dimensions, catalog numbers and similar data and I have checked and coordinated each item with Contract Drawings, Specifications, other applicable approved Shop Drawings and Contract requirements.

©Gannett Fleming Inc. 2023

2. Review for conformance of Shop Drawings, Samples, or Catalog Data by Engineer will not relieve responsibility with regard to fulfillment of terms of Contract. Assume risk of error and omission with no responsibility by Engineer.
3. No portion of work requiring a Shop Drawing, working drawing, sample, or catalog data allowed to be started nor materials be fabricated or installed prior to conformance or qualified conformance of item. Fabrication performed, materials purchased or on site construction accomplished that is not in compliance with conforming Shop Drawings and data is at Contractor's risk. Owner will not be liable for expense or delay due to corrections or remedies required to accomplish conformity.
4. Project work, materials, fabrication, and installation is to comply with conforming Shop Drawings, working Drawings, applicable Samples, and Catalog Data.

F. Contractor's Responsibility with Other Contractors:
1. Prior to submittal, review Shop Drawings of separate Contracts. Review makes available information relative to equipment data being furnished by Contractors having direct effect on construction procedures and schedules, thus reducing future construction interferences between Contracts.
2. Engineer will review general content of Shop Drawings in conjunction with requirements outlined in specifications and indicated on Drawings. Coordinate Shop Drawing data between individual Contracts. Engineer will not be responsible for coordinating Shop Drawing information, that being size and location of equipment, openings for piping, ducts and conduits, locations and sizes of concrete pads, anchor bolts, and similar Contract interface.
3. Distribute conforming Shop Drawings to other separate Contractors to make available, equipment information to correct conflicts prior to affecting construction phases. Should conflicts occur, make necessary revisions and adjustments with Engineer's review for conformance at no cost to Owner.
4. General Contractor has responsibility to accumulate Shop Drawings from other Contractors for use in construction of this Project. General Contractor will maintain a Shop Drawing file in field office containing current up-to-date Shop Drawings for each Contract.

1.07 COST BREAKDOWN

A. Furnish an itemized cost breakdown of lump sum prices in Proposal before first application for payment. Include material and installation costs for detailed breakdown of items comprising lump sum. Each breakdown to include its proper share of overhead, profit and applied general costs. Provide quantities in breakdown if required by Engineer, and subdivide work into component parts in sufficient detail to serve as basis for progress payments during construction.

B. Prepare cost breakdown schedule in a form acceptable to Engineer and accompanied by data to substantiate correctness as required by Engineer.

©Gannett Fleming Inc. 2023

1.08 OPERATION AND MAINTENANCE MANUALS

A. Furnish Operation and Maintenance Data in accordance with Section 01 78 23 for specified equipment.

PART 2 PRODUCTS

NOT USED

PART 3 EXECUTION

NOT USED

END OF SECTION

©Gannett Fleming Inc. 2023

SHOP DRAWING STAMP FORMAT

ABC Contractors, Inc.
Anytown, NJ

Project: Contract No. XXX
Construction of
XYZ Plant

Owner: _____

Submittal No.:_____
Product:_____

Mfg. By:_____

Ref. Dwg/Spec:_____

"Certification Statement: By this submittal, I hereby represent that I have determined and verified all field measurements, field construction criteria, materials, dimensions, catalog numbers and similar data and I have checked and coordinated each item with the Contract Drawings, Specifications, other applicable approved Shop Drawings and all Contract requirements."

Contractors Review

[ ] Approved [ ] Approved as Noted

By_____ Date

©Gannett Fleming Inc. 2023

SECTION 01 45 00

QUALITY CONTROL

PART 1 GENERAL

1.01 SUMMARY

A. Section Includes: General requirements related to responsibility for testing laboratory services, equipment testing, certifications, and reports.

B. Related Sections:
   1. General Commissioning Requirements: Section 01 91 13.

1.02 TESTING

A. Except as otherwise required by Article 13.03 of the General Conditions or as amended by SC-13.03 of the Supplementary Conditions, arrange for services of a testing laboratory to perform tests as specified in Contract Documents. Include cost of tests in price bid for applicable bid item. Testing laboratory utilized is to be approved by Engineer and be completely independent of Contractor's and/or supplier's operations.

1.03 EQUIPMENT TESTING

A. When an item of equipment designated for testing in Contract Documents has been completely erected, including controls and instrumentation, notify Engineer two weeks in advance, and Engineer will staff the project and designate the time to make tests as required and described in Section 01 91 13. All testing will be done in presence of Engineer and the item of equipment operated to contract documents.
   1. "Completely erected" means that installation is erected, all necessary adjustments have been made, all required utility connections have been made, required lubricants have been applied and following requirements have been met: O&M Manuals submitted, electrical system tests, spare parts lists and manufacturer's installation certificate submittals. Furnish labor, lubricants, and other materials, equipment and instruments necessary for required tests.
   2. Provide competent and experienced personnel representing manufacturer of equipment furnished and installed under this Contract, to assist in installation, adjustment, and testing of equipment in accordance with Contract Documents.

B. After an item of equipment has satisfied all of the above conditions, notify Engineer, and at such time as directed, conduct operational tests to demonstrate to Engineer's satisfaction that equipment is ready for operation. See Section 01 91 13 for testing requirements.

©Gannett Fleming Inc. 2023

1.04 REPORTS

A. Certified Test Reports:
   1. Certified test reports required by Contract Documents, will meet following requirements:
      a. Before delivery of materials for which certified test reports are required, certified copies of reports of all tests required in referenced publications or specified within Contract Documents are to be submitted for approval to Engineer.
      b. Testing is to be performed in an approved independent laboratory, within one year of submittal of reports for approval.
      c. Submit with test reports a notarized certificate from manufacturer or supplier certifying tested material meets specified requirements and is of same type, quality, manufacture and make as that proposed to be supplied.

B. Certificate of Compliance:
   1. If approved by Engineer, or where specified, furnish a Certificate of Compliance from manufacturer in lieu of specified tests and other tests required in various reference documents.
   2. Certificate to state that manufacturer has performed all required tests; that products to be supplied meet all test requirements; that tests have been performed within one year of submittal of certificate; that products tested were of same type, quality, manufacture and make as those proposed to be supplied.

C. Installation Certificates:
   1. Submit Installation Certificates for those items of equipment listed by Contract Documents.
   2. Installation Certificates to state that equipment has been installed under either continuous or periodic supervision of manufacturer's authorized representative, that it has been adjusted and initially operated in presence of manufacturer's authorized representative and that it is operating in accordance with specified requirements to manufacturer's satisfaction.

1.05 CONTRACTOR QUALITY ASSURANCE PLAN

A. Inspection, Measuring, and Test Equipment (M&TE):
   1. Identify, control, calibrate, and maintain inspection, measuring, and test equipment (M&TE) required to perform inspections, tests, and measurements in order to demonstrate conformance of Work to the specified requirements.
      a. Establish and maintain a system to identify, control, calibrate, and maintain all inspection, measuring, and test equipment prior to its use to demonstrate that construction conforms to the requirements of the Contract Documents.
         1) Identify each piece of inspection, measuring, and test equipment with a unique identification label permanently and directly affixed to the equipment.

©Gannett Fleming Inc. 2023

2) Affix calibration labels to inspection, measuring, and test equipment that show the date the equipment was last calibrated and the date recalibration is due.

b. Use only inspection, measuring, and test equipment of the proper type and accuracy for the required measurement, and store and use equipment under suitable environmental conditions.

1) Inspections or tests performed using inspection, measuring, and test equipment that is subsequently found to be out-of-tolerance, or that is damaged during use, or that is lost are considered nonconforming until all characteristics previously inspected or tested using the equipment have been reassessed and re-verified as correct, re-inspected, or re-tested as necessary.

2. Make provisions for the recalibration of inspection, measuring, and test equipment in a timely manner.

a. Either the Contractor or an agency/vendor must perform and document the calibration of inspection, measuring, and test equipment using calibration standards traceable to the National Institute of Standards and Technology (NIST), and the calibrations must be performed at the intervals specified in the calibration procedures to assure the accuracy of inspection, measuring, and test equipment.

1) NIST information is accessible at ts.nist.gov.

b. In the event that no national standards exist for the calibration of an item of inspection, measuring, and test equipment, document the basis used for the calibration of the item.

c. Recall and recalibrate inspection, measuring, and test equipment at pre-prescribed intervals, and maintain records of calibration performed.

PART 2 PRODUCTS

NOT USED

PART 3 EXECUTION

NOT USED

END OF SECTION

©Gannett Fleming Inc. 2023

SECTION 01 51 00

TEMPORARY UTILITIES

PART 1 GENERAL

1.01 SUMMARY

A. Section Includes: Requirements for certain temporary utilities, controls and construction aids required during construction.
   1. Contract One - General Construction Contractor shall provide certain temporary utilities and controls (as specified throughout this Section) for use by the other Contractors at the site or sites of the Work until the Project is complete and the Project facilities are placed under the Owner's operation.
      a. Include in the Bid the costs associated with the temporary utilities and controls, as well as fees and any other expenses as charged by the serving utility companies.
   2. Separate Contracts Temporary Utilities and Controls: Each Contractor shall provide certain temporary utilities and controls (as specified throughout this Section) at the site or sites of the Work on an as-needed basis.
      a. Each Contractor is solely responsible for temporary utilities and controls removal and restoration of the affected area when the temporary utilities and controls are no longer needed or required by Contract Time and extensions thereof.
      b. Each Contractor shall include in its Bid the costs associated with the temporary utilities and controls that it provides, as well as fees and any other expenses as charged by the serving utility companies.

1.02 TEMPORARY SERVICES AND FACILITIES

A. General Requirements: The Contractor is solely responsible for temporary facilities and controls removal and restoration of the affected area when the temporary facilities and controls are no longer needed or required by Contract Time and extensions thereof.

B. Temporary Heat and Ventilation; Existing Structures: The existing heating and ventilating facilities within existing structures may be used during the construction period where possible. However, space temperature limits shall not exceed limits set by the Owner.
   1. Should the environmental requirements of the various Specifications Sections require higher temperatures than provided by existing equipment, provide such additional heat as necessary.

C. Temporary Water Supply; Existing Site: Reasonable required amounts of water, as determined by the Owner, will be made available to the Contractors from existing system outlets on the site.

©Gannett Fleming Inc. 2023

1. Notify the Engineer and the Owner prior to using the existing system water. The Owner makes no guarantee as to the quality, purity, quantity, pressure or other characteristics of the available water.
2. Each separate Contract shall provide a backflow preventer acceptable to Owner on any Contractor connection to potable water lines.
3. Each separate Contract shall provide temporary extensions (hoses, etc.) as necessary for the performance of their work.
4. Potable (Drinking) Water: Each separate Contract shall provide an adequate quantity of potable drinking water for the exclusive use of their employees.

D. Temporary Sanitary Facilities: Each separate Contract shall provide and maintain as required by local laws, temporary toilet facilities for the workmen of each Contract on the Project. Sanitary facilities shall conform to OSHA requirements.

PART 2 PRODUCTS

2.01 MATERIALS

A. Portable Heaters: Provide heaters designed to operate in accordance with OSHA safety requirements and the requirements specified previously.

B. Temporary Water Extensions: Provide temporary piping, water hoses and controls maintained in leak free condition.

C. Temporary Power Equipment and Extensions: Provide OSHA approved portable power equipment and extension cords, temporary wires, outlets and on/off controls.

D. Temporary Lights: Provide portable task lights equipped with crash guards in conformance with OSHA requirements.

PART 3 EXECUTION

3.01 REMOVAL

A. Each Contractor shall dismantle (as required) and remove their temporary facilities and controls, and temporary service extensions, when no longer needed on the construction site.

END OF SECTION

©Gannett Fleming Inc. 2023

SECTION 01 57 00

TEMPORARY CONTROLS

PART 1 GENERAL

1.01 SUMMARY

A. Section Includes: General requirements relating to responsibilities for environmental protection during construction of Project.

1.02 NOISE CONTROL

A. Take every action possible to minimize noise caused by construction operations. Operate in conformance with any applicable ordinances, regulations, rules and laws in effect in area pertaining to noise.

B. Provide equipment that operates with least possible noise. Provide electrically operated equipment in work area to extent possible. Equip air intake of compressors with silencers, and provide machinery operated by gearing with a type of gearing designed to reduce noise to a minimum. Equip internal combustion engines with mufflers. Maintain equipment silencing features in good condition and use at all times.

1.03 AIR POLLUTION CONTROL

A. Exercise every reasonable precaution to keep air pollution to a minimum throughout life of Project.

B. Maintain dust control throughout entire construction period by use of water sprinklers or chemical dust control binder as approved by Engineer. Coatings on structures located on private property, resulting from failure to control dust, will be removed promptly at no additional expense.

1.04 DEBRIS CONTROL

A. Proceed with construction cleanup as construction progresses. Cleanup consists of removal of mud, oil, grease, trash, used forms, scrap, debris, excess materials, and any other items that are unsightly or can cause the tripping or slipping of workmen, ladders, or equipment.

B. Dispose of construction waste material in an authorized disposal area.

C. Upon failure to clean up construction area each day to satisfaction of Engineer, Owner may clean area and deduct cost from monies due.

©Gannett Fleming Inc. 2023

1.05 POLLUTION CONTROL

A. Take precautions in conduct of operations as necessary to avoid contaminating water in adjacent water courses or water impoundments such as lakes, reservoirs, etc. Do not discharge pollutants such as chemicals, fuels, lubricants, bitumens, raw sewage, and other harmful waste into or along side of rivers, streams, impoundments or into natural or man-made channels leading to them. Do not discharge water used during work on Project, that has become contaminated, into rivers, streams, or impoundments.

B. Comply with applicable regulations of the Commonwealth of New Jersey Department of Environmental Protection and any other statutes relating to prevention and abatement of pollution.

PART 2 PRODUCTS

NOT USED

PART 3 EXECUTION

NOT USED

END OF SECTION

©Gannett Fleming Inc. 2023

SECTION 01 57 13

TEMPORARY EROSION AND SEDIMENT CONTROL

PART 1 GENERAL

1.01 SUMMARY

A. Section Includes: Requirements for erosion and sediment control (E&S) measures for the earthwork activities as specified in various other Sections of the Project Manual.

1.02 REQUIREMENTS OF REGULATORY AGENCIES

A. Contractor Prepared Erosion and Sediment Pollution Control Plan:
   1. Prior to earth moving activities, prepare a soil erosion and sediment pollution control plan in accordance with rules and regulations adopted by the New Jersey Department of Environmental Protection (DEP).
   2. Detail requirements for the control plan are described in an Erosion and Sediment Pollution Control Program Manual that may be obtained from the Bureau of Soil and Water Conservation, Division of Soil Resources and Erosion Control, New Jersey.

B. Site Review: Arrange and conduct an on-site review of potential soil erosion problems with personnel of the Bureau of Soil and Water Conservation or with the County Soil conservation District.
   1. Select proper methods of soil erosion and sedimentation control acceptable to review agency.
   2. Describe selected methods on maps and in narrative report of Soil Erosion and Sedimentation Control Plan.

C. Penalties: Fines and related costs resulting from failure to provide adequate protection against soil erosion and sedimentation are the obligation of the Contractor.
   1. Silt, sedimentation and mud leaving the site will be construed as damage to neighboring property and evidence of negligence on the part of the Contractor.
   2. Damages to neighboring property shall be rectified and/or restitution shall be paid by the Contractor.

1.03 SUBMITTALS

A. Erosion and Sediment Pollution Control Plan: Prior to earth moving activities furnish two copies of plan approved by regulatory agency having jurisdiction.

B. Samples: Submit samples of materials being used when requested by the Engineer including names, sources and descriptions.

©Gannett Fleming Inc. 2023

ARTICLE 2 PRODUCTS

2.01 MATERIALS

A. Materials for erosion control work are as described in the approved plan prepared by the Contractor.

ARTICLE 3 EXECUTION

3.01 PERFORMANCE

A. Conduct work in compliance with rules, regulations and requirements of the New Jersey Department of Environmental Protection (DEP). Erosion and Sediment Pollution Control measures employed will be subject to approval and inspection by DEP.

B. The Contractor shall keep on the Project one copy of the approved Erosion and Sedimentation Control Plan.

END OF SECTION

©Gannett Fleming Inc. 2023

SECTION 01 66 00

PRODUCT STORAGE AND HANDLING REQUIREMENTS

PART 1 GENERAL

1.01 SUMMARY

A. Section Includes: General requirements for delivery, storage, handling, and protection of materials and products used in the work.

B. Related Sections:
   1. Operation and Maintenance Data: Section 01 78 23.

1.02 GENERAL REQUIREMENTS

A. Store equipment and materials in an orderly manner in designated work site storage area. Only bring equipment and materials to work areas when needed. Assume responsibility for security of storage area and work site, and protect installed items until acceptance by Engineer of final performance tests.

1.03 STORAGE OF MATERIALS AND EQUIPMENT

A. Store mechanical and electrical equipment, instrumentation, valves, gaskets, rubber material, caulking, sealants, paint and any other items manufacturer recommends be stored above 50 degrees F. on a wooden or concrete floor in a wooden or metal enclosed structure(s). Structure to be clean, dry and heated. Protect structure and subsequent work areas from dirt, dust, water, rain, snow, condensation, freezing conditions and any other conditions detrimental to life of equipment and material, from date of delivery to the time control of equipment is assumed by Owner. Maintain temperature within enclosure to 50 degrees F. minimum.

B. Store on platforms in an enclosed unheated structure protected from dirt, dust, water, rain, snow and direct sunlight, all architectural items, except caulking, sealants and rubber containing materials; wash water troughs, plates and walls; miscellaneous metals, filter underdrain; and similar items .

C. Pipe, fittings, and steel may be openly stored, on wooden platforms. Schedule delivery of primed steel so as not be exposed directly to sunlight for over two months and will be installed and finished painted within five months after priming. If above requirement is not met, blast clean primer and reprime steel.

D. Properly store each item in accordance with manufacturer's recommendations and supplemental requirements included in particular specification section covering material or equipment. Store materials and equipment in a neat and orderly manner to facilitate locating, inspecting, maintaining and removing when needed. Avoid damage to any item during handling and storage. Handling of equipment is as specified under the particular material or equipment specification section and as recommended by the

©Gannett Fleming Inc. 2023

manufacturer. Repair damaged items to satisfaction of Engineer or replace if directed by Engineer at no additional cost to Owner.

E. Check material and equipment when delivered to ensure it conforms to Contract Documents and Shop Drawings, and has not been damaged during shipment. Any materials or equipment not in compliance with Contract Documents and Shop Drawings will be directly returned to manufacturer. Report damaged items to attention of Engineer, who will decide whether item can be repaired in field or must be returned to manufacturer at no expense to Owner.

1.04 MAINTENANCE OF MATERIALS AND EQUIPMENT

A. Obtain from manufacturer, prior to or at delivery, written instructions and recommendations for storing, handling, and maintaining material or equipment until it is field tested. In addition, operating and maintenance manuals will be provided for selected valves and equipment as specified in Section 01 78 23. Develop a comprehensive maintenance program and schedule from received information and submit to Engineer for approval for stored and installed material and equipment. Approval is for general procedures and content and in no way relieves responsibility for proper storage, protection, handling and maintenance of the equipment. If any materials and/or equipment are found not to be in an as new condition when it is to be installed or during testing, Engineer, at his discretion, may order the Contractor to furnish and install new material or equipment, or repair material or equipment to his satisfaction, at no additional cost to Owner.

B. To reduce possibility of damage to materials and equipment which will not be used until the late stages of construction, schedule fabrication and deliveries if possible so that materials and equipment are only on storage site for a minimum of time before they are installed.

1.05 ADDITIONAL STORAGE SPACE

A. If determined that additional storage space is needed, or preference to use nearby off site storage for some materials and equipment because of better controlled storage conditions and/or security, submit a written request to Engineer stating reasons for wanting the off-site storage; its location, size, type structure, type of heat if applicable, etc; and when it can be inspected by Engineer. If Engineer approves the off site storage site, all of above conditions and responsibilities pertaining to on site storage will apply. Assume all costs related to acquisition of off site storage facilities at no extra or additional cost to Owner.

1.06 RIGHT OF INSPECTION

A. Owner and Engineer have right to inspect all storage sites and preventive maintenance records at any time. Immediately correct any noted deficiencies. Failure to note a deficiency on part of Owner and Engineer does not relieve responsibility for proper storage and maintenance of materials and equipment.

©Gannett Fleming Inc. 2023

1.07 PROTECTION OF INSTALLED MATERIALS AND EQUIPMENT

A. Protect all installed process, mechanical, electrical and architectural items in accordance with provisions established in Articles 1.02 and 1.03 above.

1.08 PROTECTION OF FINISHED FLOORS

A. Protect finish of single course monolithic concrete floors against damage from equipment, piping, construction materials and operations, and traffic during construction period.

B. Provide protective coverings consisting of plywood, planking, or other similar coverings approved by Engineer. Install covering to completely protect entire floor but not create a safety hazard.

C. Installation of protective covering does not relieve responsibility for integrity of floor slabs. If any slabs become damaged, replace or repair to satisfaction of Engineer.

PART 2 PRODUCTS

NOT USED

PART 3 EXECUTION

NOT USED

END OF SECTION

©Gannett Fleming Inc. 2023

SECTION 01 74 00

CLEANING AND WASTE MANAGEMENT

PART 1 GENERAL

1.01 SUMMARY

A. Section Includes: In addition to General Conditions paragraph 6.11, D., the work specified in this Section consists of related cleaning requirements as specified in certain individual Specifications Sections, during construction and final cleaning at the completion of Work.

B. Related Sections:
   1. Regulatory Requirements: Section 01 41 00.

1.02 CLEANUP

A. Before work is considered as being complete, clean building(s) and equipment, clean site and remove evidence of construction activities.

B. Construction site cleanup consists of removal of mud, oil, grease, dust, trash, scrap, debris, and surplus excavated material.

C. Select and employ cleaning materials and equipment that will not scratch, mar, deface, stain or discolor surfaces cleaned.

D. Do not discard items on site or adjoining private property. Remove discarded items to an authorized public landfill.

PART 2 PRODUCTS

2.01 MATERIALS

A. Use only those cleaning materials which will not create hazards to health or property and which will not damage surfaces.

B. Use only those cleaning materials and methods recommended by manufacturer of the surface material to be cleaned.

C. Use cleaning materials only on surfaces recommended by cleaning material manufacturer.

D. No chemicals of cleaning materials shall enter filter bays without written permission of the Commission. Any spill must be reported and cleaned up immediately.

E. Work is to occur adjacent to operating filters. Any chemicals in the filter bay area shall be contained to prevent spills or removed immediately after use.

©Gannett Fleming Inc. 2023

PART 3 EXECUTION

3.01 RESTORATION AND RESTABILIZATION

A. Restore and restabilize areas disturbed by construction operations, including storage and stockpiling areas, access roads, stream crossing sites and areas within acquired right-of-way.

B. Proceed with final restoration and restabilization, including fine grading, landscaping, seeding and paving immediately after construction activity is completed in a given area (when season permits). Dismantle and remove temporary construction facilities and leave site in a neat and orderly condition.

C. Preserve and maintain public and private signs, markers, guard rails and fences in original condition. If authorized, remove conflicting facilities, preserve, store, protect and reerect upon completion of construction. Replace damaged items at no cost to Owner.

D. Protect and guard trees, repair damaged trees or replace trees damaged beyond repair as specified elsewhere in Contract Documents.

E. Reseed damaged lawn areas and seed areas used for access roads, parking and storage as specified elsewhere in Contract Documents.

F. Restore gravel surfaces and shoulders to original condition. Remove and replace existing gravel contaminated by foreign material. Methods of construction to conform to jurisdictional requirements and applicable permits issued for work. Stabilize areas adjacent to shoulders with gravel if left unstable by construction.

G. Restore pavement, curbs, and other paved areas as specified elsewhere in Contract Documents.

3.02 SURPLUS MATERIALS REMOVED

A. Upon completion of construction, the Contractor shall remove from the site and dispose of at his own expense all surplus material, earth, rock, unsuitable material, rubbish and refuse resulting from the work, in order that the site and adjacent premises will be left in a condition satisfactory to the Engineer. During the progress of the work, the area shall be kept clean and clear of debris and waste material.

B. It shall be the responsibility of the Contractor to locate a satisfactory landfill area for the surplus materials.

C. Surplus excavation may be disposed of on site only at areas designated or noted on the Drawings.

©Gannett Fleming Inc. 2023

3.03 REMOVAL OF CONDEMNED MATERIAL

A. Promptly remove material brought on site that is determined by Engineer to be unsuitable or not in conformity with Specifications.

B. Failure to remove condemned material from site within 72 hours after receipt of notice from Engineer, may cause Engineer to have condemned material removed and cost of removal deducted from monies due Contractor.

3.04 DURING CONSTRUCTION

A. Work is to occur adjacent to operating filters. The area must be kept clean at all times and care must be taken to avoid any foreign material from entering operating filters.

B. Execute periodic cleaning to keep the Work, the site and adjacent properties free from accumulations of waste materials, rubbish and windblown debris, resulting from construction operations.

C. Provide on-site containers for the collection of waste materials, debris and rubbish.

D. Remove waste materials, debris and rubbish from the site periodically and dispose of at legal disposal areas away from the site.
   1. Conduct cleaning and disposal operations to comply with local codes, ordinances, regulations, and anti-pollution laws.

3.05 FINAL CLEANING

A. Clean surfaces of following materials as listed. Employ skilled workers for final cleaning operations.
   1. Remove grease, mastic, adhesives, dust, dirt, stains, fingerprints, labels, and other foreign materials from sight-exposed interior and exterior surfaces.
   2. Glass: Wash and shine glazing and mirrors.
   3. Aluminum: Clean as required.
   4. Painted Surfaces: Remove marks, stains, fingerprints and dirt.
   5. Exposed Slabs: Wash, scrape, and scrub, using a detergent as necessary to remove bond breaker, dirt and discolorations.
   6. Paved Surfaces: Broom clean exterior paved surfaces. Hose down paved surfaces as required.
   7. Rake clean other surfaces of the grounds

B. Ventilating systems:
   1. Clean permanent filters and replace disposable filters if units were operated during construction.
   2. Clean ducts, blowers and coils if units were operated without filters during construction.

©Gannett Fleming Inc. 2023

C. Final Inspection: Prior to final completion, or Owner occupancy, the Engineer and the Contractor shall conduct an inspection of sight-exposed interior and exterior surfaces and work areas, to verify that the entire Work is clean.

END OF SECTION

©Gannett Fleming Inc. 2023

SECTION 01 78 23

OPERATION AND MAINTENANCE DATA

PART 1 GENERAL

1.01 SUMMARY

A. Section Includes: Requirements related to Contractor's responsibility for submission of operation and maintenance manuals.

B. Related Sections:
   1. General Commissioning Requirements: Section 01 91 13.

C. The general or particular section of the Specification covering the equipment states whether an operation and maintenance manual is required for the piece of equipment.

1.02 SUBMITTALS

A. Submit to Engineer for review and approval, three (3) hard copies and one (1) electronic copy in PDF format on a CD of manuals prepared by manufacturer/supplier or Contractor within eight weeks following receipt of approved Shop Drawings, but not later than six (6) weeks prior to beginning System Performance Evaluation, as described Section 01 91 13.

B. Submission and approval of each set of manuals is considered an integral part of furnishing and installing respective equipment or system. Measurement for payment of equipment requiring an Operation and Maintenance Manual will not exceed 92 percent until Operation and Maintenance Manual meets requirements of Contract Documents.

C. Submit all Operation and Maintenance Manuals relating to a particular process or system as one submittal package. Incomplete or inadequate manuals will be returned to Contractor for correction and resubmission.

D. Contents:
   1. Table of contents and index.
   2. Brief description of each system and components.
   3. Erection or installation instructions.
   4. Starting and stopping procedures.
   5. Recommended and alternative procedures.
   6. Special operating instructions.
   7. Detailed maintenance procedures.
   8. Detailed schedule of preventive maintenance requirements (daily, weekly, monthly, quarterly, semiannually, annually, etc.).
   9. Schedule of lubrication requirements (where applicable).
   10. Manufacturer's printed operating and maintenance instructions.
   11. One copy of each wiring diagram (where applicable).

©Gannett Fleming Inc. 2023

12. One approved copy of each shop drawing and each contractor's coordination and layout drawing.
13. Schedule of recommended spare parts to be stocked, complete with part number, inventory, quantity and ordering information.
14. Data sheet listing pertinent equipment or system information, as well as the addresses and telephone numbers of the nearest sales and service representatives.

E. Material:
1. Loose leaf on 20 pound minimum, white, punched paper.
2. Holes reinforced with plastic cloth or metal.
3. Page size, 8-1/2 inches by 11 inches.
4. Diagrams and illustrations, attached foldouts as required.
5. Original quality, reproducible.
6. Oil, moisture, and wear resistant covers 9 inches by 12 inches in size.

PART 2 PRODUCTS

NOT USED

PART 3 EXECUTION

NOT USED

END OF SECTION

©Gannett Fleming Inc. 2023

SECTION 01 78 39

PROJECT RECORD DOCUMENTS

PART 1 GENERAL

1.01 SUMMARY

A. Section Includes: General requirements for maintaining a record copy of Contract Documents.

1.02 RECORD DRAWINGS

A. Keep one record copy of Contract Documents, reference documents, and technical Submittals on site, in order and annotated to show all changes made during construction process. Keep annotations current. Make record copy available to Engineer during life of Project.
   1. At completion of Project and before final payment is made, furnish Engineer one set of red lined (marked up) documents reflecting all changes described. Record drawings to include changes made to locations of buried and exposed piping, equipment changes, substitutions and variations from Contract Documents. Engineer will produce CADD as-built drawings based on Contractor red lines. Upon request, Owner will provide electronic files, either Adobe® Reader® PDF or computer-aided drafting/design (CADD) version.

1.03 PRODUCTS

NOT USED

PART 2 EXECUTION

NOT USED

END OF SECTION

©Gannett Fleming Inc. 2023

SECTION 01 79 00

DEMONSTRATION AND TRAINING

PART 1 GENERAL

1.01 SUMMARY

A. Section Includes:
   1. Requirements and procedures for the demonstration of products and systems and the training of Owner's personnel in the operation and maintenance indicated to require demonstration and training in applicable Specification Sections of Division 26.

B. Related Sections:
   1. Division 26-Electrical.

C. Payment Procedures: Include in the Lump Sum or Unit Price Bid, every expense associated with the manufacturer's demonstration and training services.

1.02 DEFINITIONS

A. Manday: An on-site eight-hour day coinciding with the Owner's work day hours time period and work days schedule. The manday shall also include every expense associated with the manufacturer providing its qualified and authorized representative on-site.

1.03 QUALITY ASSURANCE

A. Qualifications:
   1. Instructors: Employ qualified instructors familiar with the design, operation, maintenance, and troubleshooting of the relevant products and systems provided under this Contract.

1.04 MANUFACTURER'S FIELD SERVICES

A. Have equipment manufacturer provide a factory-trained engineer for seeing that equipment is properly installed, for supervising startup of equipment and instructing operating personnel.
   1. The equipment manufacturer's services shall consist of furnishing detailed instructions to personnel of the Owner regarding equipment operation and maintenance (after personnel of the Owner have had an opportunity to become familiar with the equipment) and making minor adjustments to the equipment if appropriate.
   2. Contractor will provide recommendation for mandays for Owner approval.

©Gannett Fleming Inc. 2023

B. Furnish services of equipment manufacturer's representatives for a minimum of 8 hours per day for periods as indicated in the various Specification Sections of Division 26.
   1. Time Periods:
      a. Initial Operation: Provide specified number of man-days for equipment inspection, installation, certification, start-up, and corrective adjustments.
      b. Initial Mechanical Performance Test (IMPT): Provide specified number of man-days for operation during the IMPT.
      c. Training: Provide specified number of man-days, pursuant to satisfactory completion of the IMPT, for classroom training and for hands-on training of Owner personnel.
         1) Training to include, but not be limited to the following:
            a) Start-up and shut-down procedures.
            b) Equipment adjustments.
            c) Troubleshooting.
            d) Review of the equipment Operation and Maintenance Manual. This portion of the training is to include classroom instruction, along with detailed discussions of the components and subsystems equipment.
            e) Supervision of Owner operating personnel during total system operation.
            f) Preventive maintenance scheduling and procedures.
      d. Final Mechanical Performance Test (FMPT): Provide specified number of man-days for satisfactory completion of the FMPT.
   2. The listing of the number of days service of factory-trained manufacturer's representative for specific equipment in each of the Specification Sections does not relieve Contractor of providing sufficient service to place equipment in satisfactory operation, as determined by Engineer.

END OF SECTION

©Gannett Fleming Inc. 2023

SECTION 01 91 13

GENERAL COMMISSIONING REQUIREMENTS

PART 1 GENERAL

1.01 SUMMARY

A. Section Includes: Requirements for system performance evaluation of project facilities including placing equipment in operation, operational mechanical performance testing of process systems. The Contract One General Construction Contractor will be performing mechanical performance tests on all process equipment on this Project. Contract Two Electrical Work Contractor will assist in the performance of these tests as it relates to its equipment.

B. Related Sections:
   1. Demonstration and Training: Section 01 79 00.

C. Payment Procedures:
   1. Wages and salaries of Contractor's personnel as required by any and all tests specified will be paid for by Contractor and included in applicable lump sum and unit prices bid.

PART 2 PRODUCTS

NOT USED

PART 3 EXECUTION

3.01 SYSTEM PERFORMANCE EVALUALTION

A. Initial operation and mechanical performance tests conducted under General Construction Contract One will be coordinated with and performed in conjunction with the testing of Contract Two, Electrical Work.

B. Unless waived in writing by the Engineer, the Contractor shall be present during the tests as outlined under separate Contract One - General Construction of this Project.

C. Unless waived in writing by the Engineer, the Contractor shall be present during the mechanical performance tests as outlined below.

3.02 INITIAL OPERATION

A. Upon completion of structural work as well as installation and adjustment of equipment in a manner satisfactory to the Engineer, the Contractor with his own forces, including such equipment and other experts as may be necessary (hereinafter collectively referred to as Contractor's Personnel) shall place equipment in operation.

©Gannett Fleming Inc. 2023

1. Operation of equipment prior to satisfactory completion of the Performance Tests shall be the complete responsibility of the Contractor. Contractor to perform tests without process.
2. Operating procedures during said time period shall be subject to Engineer's approval.
3. The Owner, with the personnel of the Contractor observing, will demonstrate to the satisfaction of the Engineer the mechanical performance of each item of equipment when operated in accordance with the process design intent as indicated on the Drawings and described in the applicable Specifications Sections.

B. Notification: The Contractor shall designate a day, as approved by the Engineer, for commencement of the Initial Mechanical Performance Test, utilizing water for the process flow.
   1. Give the Owner at least seven days written notice prior to placing equipment in operation.
   2. Submit manufacturer's certificate regarding equipment installation.

3.03 MANUFACTURER'S FIELD SERVICES

A. As specified in Section 01 79 00.

END OF SECTION

©Gannett Fleming Inc. 2023

SECTION 03 00 00

CONCRETE REPAIR

PART 1 GENERAL

1.01 SUMMARY

A. Section Includes: The work specified in this Section consists of cementitious repairs to existing deteriorated concrete structures.

B. Section Includes: The work specified in this Section consists of cementitious repairs to portions of the existing water treatment plant concrete structures. Types of repairs to be made include but are not limited to:
   1. Repair of surface spalls on existing concrete walls.
   2. Repair of spalled areas in filters.

C. Related Work:
   1. Grouting: Section 03 60 00.

1.02 REFERENCES

A. American Society for Testing and Materials.
   1. ASTM C33, Specification for Concrete Aggregates.
   2. ASTM C39, Test Method for Compressive Strength of Cylindrical Concrete Specimens.
   3. ASTM C78, Test Method for Flexural Strength of Concrete (Using Simple Beam With Third-Point Loading).
   4. ASTM C109, Test Method for Compressive Strength of Hydraulic Cement Mortars (Using 2-in. or 50-mm Cube Specimens).
   5. ASTM C273, Test Method for Shear Properties in Flatwise Plane of Flat Sandwich Construction or Sandwich Cores.
   6. ASTM C348, Test Method for Flexural Strength of Hydraulic Cement Mortars.
   7. ASTM C494; Specification for Chemical Admixtures for Concrete.
   8. ASTM C496, Test Method for Splitting Tensile Strength of Cylindrical Concrete Specimens.
   9. ASTM C882, Test Method for Bond Strength of Epoxy-Resin Systems Used With Concrete.
   10. ASTM C883, Test Method for Effective Shrinkage of Epoxy-Resin Systems Used with Concrete.
   11. ASTM D412; Standard Test Methods for Rubber Properties in Tension.
   12. ASTM D522, Test Method for Elongation of Attached Organic Coatings with Conical Mandrel Apparatus.
   13. ASTM D570, Test Method for Water Absorption of Plastics.
   14. ASTM D638, Test Method for Tensile Properties of Plastics.
   15. ASTM D695, Test Method for Compressive Properties of Rigid Plastics.
   16. ASTM D732, Test Method for Shear Strength of Plastics by Punch Tool.

©Gannett Fleming Inc. 2023

17. ASTM D968, Test Method for Abrasion Resistance of Organic Coatings by the Falling Abrasive Tester.
18. ASTM D1623, Test Method for Tensile and Tensile Adhesion Properties of Rigid Cellular Plastics.
19. ASTM D2126, Test Method for Response of Rigid Cellular Plastics to Thermal and Humid Aging.
20. ASTM D2842, Test Method for Water Absorption of Rigid Cellular Plastics.
21. ASTM D3359, Method for Measuring Adhesion by Tape Test.
22. ASTM E96; Standard Test Methods for Water Vapor Transmission of Materials.
23. ASTM G23; Standard Practice for Operating Light-Exposure Apparatus (Carbon-Arc Type) with and Without Water for Exposure of Nonmetallic Materials.

B. American National Standards Institute (ANSI)

.

1. NSF/ANSI 61: Drinking Water System Components – Health Effects

1.03 SUBMITTALS

A. Product Data: Submit manufacturer's published product data, catalog cuts, specifications, installation/application instructions and such other data as required to provide complete descriptive information for the following:
   1. Cementitious Repair Mortar.
   2. Polyurethane Crack Injection Materials.

B. Shop Drawings: Submit drawings of the formwork and formwork shoring detail (if any).

C. Written Description of Repair Work: Submit a written sequence of cementitious repair work.

D. As-Builts: Submit drawings which delineate the repair areas for each structure being repaired, indicating type of repair, location, and dimensions.

1.04 QUALITY ASSURANCE

A. Concrete Repair Product Manufacturer Qualifications: The manufacturer of the specified product shall have in existence, for a minimum of 10 years, a program of training, certifying, and technically supporting a nationally organized Approved Contractor Program with annual recertification of its participants.

B. Contractor Qualifications: Contractor shall be an Approved Contractor of the manufacturer of the specified product, who has completed a program of instruction in the use of the specified material, and shall provide a notarized certification from the manufacturer attesting to their Approved Contractor status.
   1. At the discretion of the Engineer, Bids shall be accepted from an approved Contractor of the manufacturer of the specified product. Said Contractors shall provide the Engineer with two job references where they have successfully repaired existing concrete with the specified product.

©Gannett Fleming Inc. 2023

C. Manufacturer's Representative Services: The Contractor shall arrange for, and provide, the services of the product manufacturer's technical representative for the initial concrete repair operation. Services shall include detailed instructions to the Contractor's personnel on the use of the concrete repair material and witness the first application of each system.

1.05 DELIVERY, STORAGE AND HANDLING

A. Deliver, repair materials to job site in their original unopened containers with labels intact and legible at time of use.
   1. Store liquid components protected from freezing and within the environmental temperature limits as recommended by the product manufacturer.
   2. Store dry components protected from the weather and under the conditions acceptable to the product manufacturer.

1.06 PROJECT CONDITIONS

A. Environmental Requirements. Do not apply cementitious repair products when the ambient and surface temperatures are lower than 45 degrees F. or such manufacturer's limitations which may be more restrictive.

B. Traffic Limitations: Do not expose finished cementitious repair work to traffic of any kind until four hours time following finished applications of the repair products.

C. Existing Conditions: During the preliminary investigations of the concrete structures, the full extent and depth of deterioration could not be accurately determined. As a result, the exact quantity of each repair material cannot be listed.
   1. Inspection: The Contractor, in conjunction with the Engineer, shall inspect the existing concrete surfaces and determine the location, limits and type of repair required for each structure.
   2. Repair Sketches: Following inspection, the Contractor shall develop and submit sketches of repair sites as stated for As-Builts.
   3. Repair of cracks and spalled or delaminated concrete areas specifically indicated on the Drawings shall be included in the Bid price. Repair of cracks and spalled or delaminated concrete areas not specifically indicated on the Drawings shall be repaired only at the direction of the Engineer and the cost of such authorized repairs shall be negotiated as an increase in Contract Price.
      a. Repair of concrete required due to demolition of adjacent concrete shall be included in the Bid price. The Contractor shall not perform repair work without prior approval of the Engineer.

PART 2 PRODUCTS

2.01 CONCRETE MATERIALS

A. Not Used

©Gannett Fleming Inc. 2023

2.02 CEMENTITIOUS POLYMER MORTARS

A. Cementitious Polymer Trowel-Grade Mortar (For Horizontal and Vertical Surfaces): A polymer-modified, Portland Cement, two-component, fast setting, easy tooling patching mortar suitable for horizontal or vertical surfaces, and of a concrete gray color. Mortar must be NSF-61 approved.
   1. Mortar packaged as a plant-proportioned two component kit.
      a. Component A: Liquid co-polymer.
      b. Component B: Blend of cements, aggregates, patented accelerators and mixtures.
   2. Coarse Aggregate Admixture: Clean, dry well graded aggregate, of 3/8 size maximum, conforming to ASTM C33. Crushed limestone aggregate products shall not be acceptable; pea gravel preferred. Add to mortar package at a maximum rate of 42 pound per plant proportioned kit.
   3. Use mortar for applications up to and including 1 inch thickness. Use coarse aggregate admixture for repairs thicker than 1 inch.
   4. Properties at 73 degrees Fahrenheit, 50 Percent Humidity, and 28 days:
      a. Compressive Strength:
         1) Mortar: ASTM C109 - 8,800 psi.
         2) Aggregate Admixture: ASTM C39 - 6,000 psi. (Tested with addition of 42 pounds of clean, well-graded, saturated surface dry, low-absorption and high-density coarse aggregate.)
      b. Flexural Strength, ASTM C78:
         1) Mortar: 2,000 psi.
         2) Aggregate Admixture: 1,100 psi. (Tested with addition of 42 pounds of clean, well-graded, saturated surface dry, low-absorption and high-density coarse aggregate.)
      c. Splitting Tensile Strength, ASTM C496:
         1) Mortar: 1,100 psi.
         2) Aggregate Admixture: 600 psi.
      d. Bond Strength with Mortar Scrubbed into Substrate: ASTM C882, Modified; Mortar - 2,200 psi.
   5. Acceptable Manufacturers:
      a. Sika Corporation; Sika Top 122.
      b. Or equal.

B. Cementitious Polymer Trowel-Grade Non-Sag Mortar (For Overhead Surfaces): A polymer-modified, Portland Cement, two-component, fast setting non-sag, patching mortar specifically formulated for trowel application on vertical surfaces, and of a concrete gray color. Mortar must be NSF-61 approved.
   1. Mortar packaged as a plant-proportioned two component kit.
      a. Component A: Liquid co-polymer.
      b. Component B: Blend of cements, aggregates, patented accelerators and admixtures.
   2. For repairs greater than 1 1/2-inches depth apply mortar in lifts of 1 1/2-inches maximum thickness.
   3. Properties at 73 degrees Fahrenheit, 50 Percent Humidity, and 28 days:

©Gannett Fleming Inc. 2023

a. Compressive Strength: Mortar, ASTM C109 - 9,000 psi.
b. Flexural Strength: Mortar - 2,100 psi.
c. Splitting Tensile Strength, ASTM C496: Mortar - 1,000 psi.
d. Bond Strength with Mortar Scrubbed into Substrate: ASTM C882, Modified; Mortar - 3,200 psi.

4. Acceptable Manufacturers:
   a. Sika Corporation; Sika Top 123.
   b. Or equal.

2.03 CRACK REPAIR MATERIAL

A. Exterior Sealing System: Two-component, moisture-insensitive rigid setting gel material.

B. Concrete Crack Repair Material (Injection System): In general, two different types of injection materials may be required; one for dry or damp surfaces and one for leaking water surfaces. Material must be NSF-61 approved.

C. Not Used

D. Cracks Leaking Water or Showing Evidence of Recent Leakage: Use a high-solids, hydrophobic, non-toxic, expanding polyurethane liquid chemical grout. The grout shall remain permanently flexible and adhere to wet or dry surfaces.
   1. Grout Characteristics:
      a. Shear Strength, ASTM C273, 34 psi.
      b. Tensile Strength, ASTM D1623, 31 psi.
      c. Elongation, ASTM D1623, 45 percent.
      d. Shrinkage, ASTM D2126, zero percent.
      e. Water Absorption, ASTM D2127, 0.04 lb/ft^2, and ASTM D2842, 0.09 lb/ft^2.
   2. Acceptable Manufacturers:
      a. Sika Corporation; SikaFix HH LV
      b. Or Equal

2.04 CEMENTITIOUS COATINGS
   a. Not used

2.05 EPOXY AND ELASTOMERIC COATINGS
   a. See section 09 96 00

PART 3 EXECUTION

3.01 PREPARATION

A. Verification: Contractor shall meet with the Engineer before commencing removal work to verify areas to be repaired.

B. Protective Measures: Prior to performance of surface preparation work, provide in-place protection on piping systems and equipment to properly protect them from

©Gannett Fleming Inc. 2023

debris that results from concrete removal and materials being used to restore concrete structure.

1. Provide temporary measures to prevent the spillage of concrete debris and repair product debris into the wastewater in the various tanks and structures.
2. Metal fabrications, such as pipe railing, piping, pipe sleeves, etc. that are now anchored to or embedded in the existing concrete structures shall be removed at certain locations. These fabrications shall be salvaged, unless otherwise noted, and reinstalled on restored concrete surfaces. Contractor has the option of replacing metal fabrications now embedded instead of salvaging them but to do so at no increase in Contract Price.

C. Existing Coating Removal: Not Used

D. Deteriorated Concrete Removal: Exercise reasonable care in removing the unsound concrete to the limits which were determined prior to removal operations.

1. Contractor is solely responsible for the removal and lawful disposal of the debris.
2. Removal Procedure: Make a one inch deep saw cut around the perimeter of the repair area. Remove spalled, scaled, loose and deteriorated concrete to sound concrete; additional requirements as follows:
   a. Remove unsound concrete material in a manner to facilitate uniform placement of plasticised concrete; slope upper area of excavated voids evenly to within one inch of the face of the concrete to preclude entrapping air and forming hollow spots in the freshly placed plasticized concrete. Within one inch of the surface, the upper outline shall be essentially normal (perpendicular) to the surface.
   b. Render surfaces of exposed concrete and reinforcing steel free of oil, solvent, grease, dirt, dust, rust, coatings, loose particles and foreign matter.
   c. Use caution where reinforcing steel is uncovered so as not to damage the steel or its bond in the surrounding concrete. Do not use pneumatic tools in direct contact with reinforcing steel. Use maximum 30 pound size hammer for chipping behind reinforcing steel. Exposed reinforcing shall remain in place except where otherwise indicated for removal by direction of the Engineer. Blast clean reinforcing steel in accordance with SSPC-SP-6, Commercial Blast Cleaning to remove surface contaminants, rust and rust scale.
      1) The depth of concrete removal shall be such as to include deteriorated concrete but not less than 3/4 inch behind the reinforcing steel.
      2) Where the existing reinforcing steel is severely corroded or damaged, cut out reinforcing steel and replace with new reinforcing steel of the same size and spacing. Where existing steel is determined by the Engineer to have insufficient cover, either replace reinforcing or adjust as directed. Attach new steel behind existing steel with a minimum lap as determined by the Engineer. Remove concrete to a minimum depth of 3/4 inch behind the new steel.
   d. Thoroughly blast clean and vacuum the newly exposed area prior to forming.

©Gannett Fleming Inc. 2023

e. Do not use bonding compounds for placement of plasticized concrete. Dampen exposed concrete surfaces immediately prior to placement of fresh concrete.
   1) For wall repairs, small holes may be drilled into forms to permit air to escape during pouring and consolidation.
f. After curing and stripping of forms, the patched area shall be tested (sounded) to detect the presence of hollow spots. Removal and repair of observed defects shall be performed at no increase Contract Price.

E. Surface Preparation for Cementitious Polymer Mortar Application: Cut out existing deteriorated concrete using equipment which will not produce cracking or spalling beyond the area of repair.
   1. Following the concrete cut out operations, abrasive blast clean the cementitious repair mortar contact surfaces to produce 1/8-inch minimum profile.
   2. For trowel applied cementitious repair mortar on existing concrete, saw-cut around perimeter of the repair, and chip out existing concrete to a minimum depth of 1/4-inch, or as specified in succeeding articles. Saw cutting required to eliminate feather edging of the repair material.
   3. Make prepared surface free of deteriorated concrete, dirt, oil, grease, or other bond-inhibiting substances. Use de-greasing products of the type as recommended by the Cementitious Repair Mortar Manufacturer and approved by Owner.

F. Surface Preparation for Cementitious Coating: Not Used

G. Surface Preparation for Epoxy Coating: Not Used

H. Surface Preparation for Elastomeric Coating: Not Used

3.02 PLASTICIZED CONCRETE INSTALLATION

A. Not Used

3.03 CEMENTITIOUS POLYMER MORTAR INSTALLATION

A. General Requirements: Perform mixing, placing, and curing of cementitious polymer mortars in conformance with manufacturer's directions. Additionally, conform to the following requirements as specifically applicable to this project.

B. Cementitious Polymer Mortar Placement: At time of placement, surfaces shall be water saturated but surface dry with no glistening water. Immediately upon completion of mixing operation, place repair mortar in strict accordance with manufacturer's recommended procedures.
   1. Curing: On open repair areas cure polymer mortar by use of wet burlap, fog mist or water-based curing compound.

C. Crack Sealing Grout: As specified in Section 03 60 00.

©Gannett Fleming Inc. 2023

3.04 REPAIR OF CRACKS

A. Dry Cracks; Perform mixing, placing and injection of epoxy material in conformance with manufacturer's specifications. Also, conform to the following as specifically applicable to this project.
   1. Surface Preparation: Prepare cracks to be sealed using oil-free compressed air or water under pressure to remove dirt and or loose material from inside the cracks.
   2. Exterior Sealing and Entry Port Installation: Approximately every six inches along the length of the existing cracks place an entry port directly over the crack. Use flanged plastic port with cork stopper glued in place by the gel-like epoxy. Allow exterior sealing and entry port system to harden before injection sealing.
   3. Injection Sealing: The epoxy resin grout shall be injected into cracks under pressures between 10 to 80 psi. Pressures exceeding 80 psi are not permitted as structural damage to existing concrete may result. Begin injection the liquid epoxy resin into the lowest entry port until it is visible in the next entry port. Repeat the same process in successive entry ports until the entire length of crack is filled. After minimum of 24 hours at 70 degree F., the exterior seal and ports may be removed. When temperatures are below 70 degrees F., remove exterior seal and ports in accordance with manufacturer's published specifications.
   4. If, during the injection process, indications are that the materials are pouring into cavities not visible nor detectable from the surface, cease injecting the mortar material for 24 hours, allowing the injected mortar to harden and form a barrier for succeeding injections or repair mortar. Repeat the stop and go process until it is evident that sealing the crack is succeeding as observed and determined by the Engineer.
   5. Minimum surface temperature at time of application: 40 degrees F.

B. Active Water Leakage Cracks: Repair cracks showing evidence of active leakage and moisture using a water activated chemical grout as follows:
   1. Placement Procedure: Set packers as required by the manufacturer.
      a. Begin by drilling 5/8-inch diameter holes along the side of the crack at a 45 degree angle. Drill the hole to intersect the crack midway through the substrate. Spacing of the devices shall be accomplished as required to achieve the travel of the Polyurethane chemical grout for the pressure injection grouting between packers and to fill the crack to the maximum.
      b. Pump polyurethane chemical grout into or behind fissure or into voids which are allowing water to infiltrate into unwanted areas. Pressures for injecting grout are determined by the tightness of the crack. Do not exceed 3000 PSI but increase pressure until grout flows into crack. If concrete being injected contains insufficient moisture to activate the grout, inject the crack with a small amount of water prior to injecting the polyurethane chemical grout.
      c. Pump polyurethane chemical grout for 45 seconds and then pause to allow the material to flow into the cracks and crevices. Watch for material flow and water movement to appear on the surface. When movement stops, begin injection into the next packer. When sealing vertical cracks, begin injection at the bottom of the crack and work vertically. If faster reaction time is needed, or if grout is being pumped at cold temperature, additional

©Gannett Fleming Inc. 2023

Accelerator can only be added to component B. Consult Technical Service before adding Accelerator. Reinject to assure that all voids are properly sealed off.

d. Minimum installation temperature:
   1) Minimum substrate temperature: 40 degrees F.
   2) Minimum material temperature: 60 degrees F.

3.05 CEMENTITIOUS COATING APPLICATION

A. Not used

3.06 EPOXY AND ELASTOMERIC COATING APPLICATION

A. See section 09 96 00

END OF SECTION

©Gannett Fleming Inc. 2023

This Page

Intentionally

Left Blank

©Gannett Fleming Inc. 2023

SECTION 09 96 00

HIGH PERFORMANCE COATINGS

PART 1 GENERAL

1.1 SUMMARY

A. Section Includes: Requirements for surface preparation, interior and exterior painting and repaint work.

B. Related Sections:
1. Section 01 33 00 - Submittal Procedures.
2. Section 01 66 00 - Product Storage and Handling Requirements.

1.2 REFERENCES

A. American Water Works Association:
1. ANSI/AWWA C104/A21.4, American National Standard for Cement-Mortar Lining for Ductile Iron Pipe and Fittings for Water
2. ANSI/AWWA C151/A21.51, American National Standard for Ductile-Iron Pipe, Centrifugally Cast in Metal Molds or Sand-Lined Molds, for Water or Other Liquids.
3. ANSI/AWWA C550, Standard for Protective Epoxy Coatings for Valves and Hydrants.

B. National Sanitation Foundation (NSF) International:
1. NSF/ANSI Standard 61, Drinking Water System Components-Health Effects.
2. NSF/ANSI/CAN 600.

C. Occupational Safety and Health Act (OSHA):
1. OSHA 1910.144, Safety Color Code for Marking Physical Hazards.
2. OSHA 1910.145, Specifications for accident prevention signs and tags.

D. The Society for Protective Coatings (SSPC):
(1) Surface Preparation Specifications:
a. SSPC-SP 1, Solvent Cleaning.
b. SSPC-SP 2, Hand Tool Cleaning.
c. SSPC-SP 3, Power Tool Cleaning.
d. SSPC-SP 6, Commercial Blast Cleaning.
e. SSPC-SP 7, Brush-Off Blast Cleaning.
f. SSPC-SP 8, Pickling.
g. SSPC-SP 10, Near-White Blast Cleaning.
h. SSPC-SP 13, Surface Preparation of Concrete.
i. SSPC-SP 16, Brush-Off Blast Cleaning of Coated and Uncoated Galvanized Steel, Stainless Steels, and Non-Ferrous Metals.

©Gannett Fleming Inc. 2023

1.3 DEFINITIONS

A. The term "paint" as used in this Section means coating system materials, including pretreatments, primers, emulsions, enamels, stain, sealers, fillers, and other applied materials whether used as prime, intermediate or finish coats.

B. The term "exposed" as used in this Section means all exposed to view items not covered with concrete, masonry, wallboard or similar building material.

1.4 SYSTEM DESCRIPTION

A. Design Requirements:
   1. Ensure surfaces are properly prepared, proper primer applied to correct mil thickness, and finish coat is compatible with primer coat and applied to correct mil thickness. This requirement applies to all equipment and material, whether the total process is done in the shop, in the field, or partially in shop and partially in field.
   2. Provide paint products supplied by one manufacturer unless otherwise approved by Engineer.

1.5 SUBMITTALS

A. Submit the following information to the Engineer for approval in accordance with the requirements of Section 01 33 00, Submittal Procedures:

B. Product Data:
   1. Submit material manufacturer's technical information, including paint label analysis and application instructions for each material proposed.
      a. Submit paint schedule in same format as indicated in this section. Include surface preparation with schedule. List each material and cross-reference to specific paint and finish system and application. Identify by manufacturer's catalog number and general classification.
      b. Submit copies of manufacturer's complete color charts for each coating system. Owner to make color selections.
      c. Provide certifications from manufacturers verifying that factory applied prime coats are compatible with specified finish coatings.

C. Quality Assurance/Control Submittals:
   1. Applicator Qualifications: Submit qualifications as specified under Quality Assurance Article below.

D. Closeout Submittals:
   1. Paint manufacturer's direct factory representative is to certify in writing to the Engineer, of the painting and coating compliance with the following:
      a. Submit certificate stating Work was properly prepared and painted in accordance with Specifications and including the following Factory representative's initial site inspection of conditions pertinent to painting and surface preparation work with Contractor or his authorized painting

©Gannett Fleming Inc. 2023

representative. Factory representative's second site inspection at completion of painting and coating work to check proper application and actual mil thickness compliance with these Specifications.

b. Submit manufacturer's certificate stating quantity of paint furnished was sufficient to properly coat all surfaces.

a) Certification issued to Engineer only following unacceptable painting and coating work being rectified to Engineer's satisfaction.

b) Make factory representative's services available to the Engineer for immediate consultation in regard to the painting and coating work, and make above stated inspections in the Engineer's presence

2. Maintenance Manual: Upon completion of work, furnish copies of a detailed maintenance manual including following information:

a. Product name, number and technical data sheet.

b. Name, address and telephone number of manufacturer and local distributor.

c. Detailed procedures for routine maintenance and cleaning.

d. Detailed procedures for light repairs such as dents, scratches and staining.

1.6 QUALITY ASSURANCE

A. Applicator Qualifications:

1. Has successfully painted utility or industrial installations for at least five years. Submit name and experience record of painting applicator to Engineer. Include a list of at least five utility or industrial installations painted within last five years, along with responsible officials, architects or engineers concerned with project, and the approximate contract price.
2. Painting applicators whose submissions indicate a lack of experience required to perform the work, or have performed work in an unsatisfactory manner, will not be approved.

B. Pre-Installation Meeting: Prior to any painting, arrange a meeting between a representative of the paint manufacturer, the Engineer, and the Contractor's personnel involved in painting. Purpose of meeting is to have paint manufacturer's representative address the following:

1. Define surface preparation requirements for the different items which are to receive paint.
2. Review which paint is used on which items and summarize application procedures.
3. Answer questions.

C. Field Samples:

1. Not used

D. Regulatory Requirements

©Gannett Fleming Inc. 2023

1. In accordance with NJDEP requirements, provide coatings and associated components of water systems coming in contact with potable water conforming to NSF/ANSI Standard 61 and NSF/ANSI/CAN 600 where applicable.

1.7 DELIVERY, STORAGE AND HANDLING

A. Deliver, store and handle paint in accordance with Section 01 66 00 - Product Storage and Handling Requirements, manufacturer's recommendations, and as supplemented below.

B. Delivery of Materials:
   1. Deliver materials to job site in original, new, and unopened packages and containers bearing manufacturer's name and label with following information:
      a. Name or title of material.
      b. Manufacturer's stock number and date of manufacture.
      c. Manufacturer's name.
      d. Contents by volume, for major pigment and vehicle constituents.
      e. Thinning instructions where recommended.
      f. Application instructions.
      g. Color name and number.

C. Storage of Materials:
   1. Store only acceptable project materials on project site.
   2. Store in a suitable location approved by Engineer. Keep area clean and accessible.
   3. Restrict storage to paint materials and related equipment.
   4. Comply with health and fire regulations including the Occupational Safety and Health Act of 1970.
   5. Keep temperature of storage area above 50 degrees F or manufacturer's recommended storage temperature, whichever is higher.

1.8 PROJECT CONDITIONS

A. Environmental Requirements:
   1. Adhere to manufacturer's data on air and surface temperature limits and relative humidity during application and curing of coatings.
   2. Do not spray apply paint when wind velocity is above 15 mph.
   3. Schedule coating work to avoid dust and airborne contaminants.
   4. Apply exterior finishes during daylight hours only.
   5. When painting in confined spaces, or because of unfavorable ambient conditions, longer drying times will be necessary.
   6. Provide supplementary ventilation such as fans and blowers in confined or enclosed areas to carry off solvents during evaporation stage.

B. Existing Conditions:
   1. Broom clean area before painting is started. Remove dirt and dust.

©Gannett Fleming Inc. 2023

a. After painting operations begin, broom cleaning will not be allowed. Clean only with commercial vacuum cleaning equipment.

1.9 SCHEDULING

A. Perform the field painting work for other separate Contracts of the Project. In consideration of this requirement, coordinate the field painting work to coincide with the Construction Progress Schedule.

B. Schedule Repaint Work Surface Preparation operations specified herein so that the work of the other separate Contracts will be installed after such surface preparation work is performed.

C. Schedule final paint coating applications to occur only after the other separate Contracts have no further work to be performed on structure surfaces and equipment surfaces. However, primer coatings may be applied to repaint surfaces where the paint manufacturer's primer maximum recoat time period will not be exceeded by the scheduling.

PART 2 PRODUCTS

2.1 MANUFACTURERS

A. Tnemec Co., Inc.

B. Or Approved Equal.

2.2 MATERIALS

A. Paint: Provide new and unused paint materials of the various types specified in the Paint Schedule at the end of this Section.

B. Provide primers produced by the same manufacturer as the finish coats.

C. Thinners: Use only thinners recommended by the paint manufacturer and use only to recommended limits.

D. Colors and Finishes:
1. Provide surface treatments and finishes as specified in Painting Schedule at end of this Section.
2. Color Schedule: Except as specified herein, colors for painted surfaces will be selected by Owner after Contract is awarded.

E. No substitutions will be considered that decrease film thickness, number of coats, surface preparation or generic type of coating specified. Furnish same color selection of substituted manufacturers as manufacturers specified, including accent colors in coating systems.

©Gannett Fleming Inc. 2023

PART 3 EXECUTION

3.1 EXAMINATION

A. Examine areas and conditions where painting work is to be performed. Notify Engineer in writing of conditions detrimental to proper and timely completion of Work. Do not proceed with Work until unsatisfactory conditions have been corrected in a manner acceptable to Engineer.

3.2 SURFACE PREPARATION

A. Perform all preparation and cleaning procedures as specified and in strict accordance with paint manufacturer's instructions for each particular substrate and atmospheric condition.

B. Remove hardware, hardware accessories, machined surfaces, plates, lighting fixtures, and similar items not to be finish painted, or provide surface applied protection prior to surface preparation and painting operations. Following completion of painting of each space or area, reinstall removed items by workmen skilled in the trades involved or remove applied protection, if applicable.

C. Clean sand, dirt, dust and all other foreign matter from surfaces to be painted before applying paint or surface treatments. Remove oil and grease with clean cloths and cleaning solvents prior to mechanical cleaning. Program cleaning and painting so that dust and other contaminants from cleaning process will not fall in wet, newly painted surfaces.

D. Prepare surfaces which were not shop painted or were improperly shop painted or damaged, and all abraded or rusted surfaces, which are to be painted, as specified for the appropriate condition under this Section.

E. Apply prime coat to any prepared surface within 24 hours and before rust bloom develops.

F. Primed surfaces, exposed to sunlight for 60 days or more, must be scarified by lightly sanding or whip blasting to assure proper adhesion of final coat(s).

G. If there is a time period in excess of five (5) months from application of a shop or field primer coat to proposed date to apply the first field finished coat, first field finished coat will not be applied. Instead, blast clean primer completely off to obtain the SSPC-SP surface specified for particular application in Painting Systems. Then, reapply primer and finish paint as specified. Cost of removing primer by blast cleaning and reapplying primer will be at no expense to Owner.

H. Not Used

I. Not Used

©Gannett Fleming Inc. 2023

J. Not Used

K. Not Used

L. Not Used

M. Not Used

N. Not Used

O. Concrete:
   1. Remove oil, grease, dirt, etc. by steam cleaning or scrubbing and flush with water.
   2. Remove fins, projections, and abrupt irregularities, including those under 1/8-inch, by grinding so unnoticeable transitions are achieved.
   3. Allow new concrete to cure 28 days. Abrasive blast or mechanically abrade concrete to remove laitance, form release agents, curing compounds, hardeners, sealers and other contaminants and to provide surface profile. Reference SSPC-SP 13.
   4. Fill exposed aggregate or deep pits and air holes with Tnemec Series 215 Surfacing Epoxy.
      Resurfacing Epoxy and trowel to a uniform surface texture.
   5. Perform work only on cured, clean and dry concrete surfaces.

P. Not Used

Q. Not Used

R. Not Used

S. Not Used

T. Not Used

U. Existing Surface Conditions: In the opinion of the Engineer, the following surface preparation requirements represent the minimum preparation necessary for existing painted and unpainted surfaces. However, the Contractor will perform the level of surface preparation exceeding the specified minimums as is necessary to maintain the manufacturer's product performance guarantee.
   1. Notice: Where paint failure occurs as an obvious result of inadequate surface preparation, the Owner will require remedial work at no increase in Contract Price.
   2. Due to the nature of the types of surface preparation being required in the project, it is necessary to coordinate such preparation work to be performed after existing equipment and material removal and before new equipment and material installation.

©Gannett Fleming Inc. 2023

V. Hydro-Cleaning Existing Surfaces: Prior to blast-cleaning operations perform hydrocleaning (power washing) on the contaminated surface areas before other forms of surface preparation are performed.
   1. Perform hydro-cleaning with TSP and Chlorox solutions in the hydro-cleaning water. Make the concentrations of these solutions of sufficient strength to neutralize the surfaces and to effectively eliminate future fungus growth.
   2. During the hydro-cleaning operations provide a suitable means of preventing the washdown debris from entering the floor drainage systems. Dispose of the collected washdown debris in a lawful manner.
   3. Hydro-cleaned surfaces will air dry or be force-dried, as determined by moisture meter or test-patch, prior to paint application.

W. Not Used

X. Hand-Cleaning Existing Surfaces: Perform hand-cleaning where the mechanical cleaning and surface preparation methods specified previously cannot be used, such as in areas not machine accessible.
   1. Prepare previously painted surface by wire-brushing, scraping and sanding to solid material, where rust, powdering, scaling, peeling or flaking is evident. Sand solid edges of solidly adhering existing coatings to a smooth condition.
   2. Prepare hard, glossy, previously painted surfaces for paint adhesion by sandpapering, followed by surface washing and rinsing.
   3. Just prior to application of paint or coatings, the prepared surfaces will be dry, clean and free of loose dirt, dust and grit.
   4. Collect and dispose of hand-cleaning debris in a lawful manner off site.

Y. Existing Surfaces:
   1. Ferrous Metals (Including Piping) Having Existing Coatings: Degrease, Solvent Clean according to SSPC SP 1 followed by Brush Blast according to SSPC SP 10 to profile the surface.
   2. Aluminum and Stainless Steel: Remove dirt, dust, debris and other foreign matter by such methods so as not to damage the factory finishes.

3.3 MATERIALS PREPARATION

A. Mix and prepare painting materials in strict accordance with manufacturer's directions.

B. Do not mix coating materials produced by different manufacturers.

C. Store materials not in actual use in tightly covered containers. Maintain containers used in storage, mixing, and application of paint in a clean condition, free of foreign materials and residue.

©Gannett Fleming Inc. 2023

D. Stir all materials before application to produce a mixture of uniform density, and as required during application of materials. Do not stir any film which may form on surface into material. Remove film and, if necessary, strain material before using.

E. If material has thickened or must be diluted for application, buildup coating to same film thickness achieved with undiluted material. Do not use thinner to extend coverage of paint.

F. Paint all exposed surfaces, except where natural finish of material is specifically noted as a surface not to be painted. See Part 3, Paint Schedule, for painting requirements.

G. Where items or surfaces are not specifically mentioned, paint these the same as adjacent similar materials or areas.

H. Do not paint the following:
   1. Chromium plate, anodized aluminum and similar finished materials, unless otherwise noted on the drawings.
   2. Aluminum, except where in contact with dissimilar materials.
   3. Fiberglass items such as tanks, and troughs.
   4. Prefinished Items.
      a. Unless otherwise shown or specified, factory finishing such as baked-on factory porcelain, polyvinylfluoride or other similar finish is specified for such items as, but not limited to, mechanical and electrical equipment such as instruments, light fixtures and distribution cabinets. Touch up factory finished items with paint supplied by the item manufacturer. As directed by Engineer, field paint damaged prefinished items or return them to the factory for repair and repainting.
      b. Return to the factory, any prefinished item not having the specified type of paint or proper mil thickness for painting or have additional coats applied in the field.
   5. Concealed Surfaces:
      a. Unless otherwise shown or specified, nonmetallic wall or ceiling surfaces in concealed from view areas and generally inaccessible areas, such as pipe spaces, duct shafts, and above acoustical and plaster ceilings, do not require field painting as applicable to this Project.
      b. Ducts, conduits and other materials with corrosion-resistant surfaces, not a paint, which are above finished ceilings, do not require field painting.
      c. Structural and miscellaneous metals covered or concealed with an acoustical ceiling, plaster ceiling, fireproof insulation, concrete, masonry, or similar material will receive a primer, shop or field, compatible with the covering material before they are covered.
      d. Field painting is not required for pipe and conduits in concealed from view areas, unless they are non-galvanized ferrous metal. Paint non-galvanized ferrous pipe and conduit in accordance with Painting Schedule. Label for identification all concealed from view pipe and conduits.

©Gannett Fleming Inc. 2023

I. Operating Parts and Labels
   1. Moving parts of operating units, mechanical and electrical parts, such as valve and damper operators, linkages, sensing devices, motor and fan shafts do not require finish painting unless otherwise specified.
   2. Do not paint over any code-required labels, such as UL and Factory Mutual, or any equipment identification, performance rating, name, or nomenclature plates.
   3. Remove all paint, coating or splatter inadvertently placed on these surfaces.

J. Review installation procedures under other Sections and coordinate the installation of items that must be field painted in this Section.

K. Provide finish coats which are compatible with the prime paints used. Review other Sections of these Specifications in which prime paints are to be provided to ensure compatibility of the total coatings system for the various substrates. Contractor responsible for the compatibility of all shop primed and field painted items in this Contract. Furnish information on the characteristics of the finish materials proposed to use, to ensure that compatible prime coats are used. As directed by the Engineer, provide barrier coats over incompatible primers or remove and reprime. Notify the Engineer in writing of anticipated problems using the coating systems as specified with substrates primed by others. This requirement does not apply to fully factory finished items. This is items having both primer and finish coatings except as specified in Painting Factory Finished Items paragraph.

L. Protection: Protect those surfaces not being painted both during and after the painting work, and protect adjacent work and materials from accidental drops, splashes over-spray, etc., using impervious material coverings.
   1. Clean up and perform the remedial work necessary to restore surfaces damaged by misplaced paint and coatings.
   2. Provide in-place protection for fully factory finished construction products, appliances, including lighting fixtures, fire detection systems, sprinkler heads, and prefinished building panels.
   3. Provide DUST-TIGHT in-place protective coverings (masking where possible) to seal openings in items such as motors, controls, bearings and similar areas which may be damaged internally by the inclusion of debris and dust created by surface preparation operations.

3.4 APPLICATION

A. Strictly follow paint manufacturer's label instructions for proper application, spreading rate and drying time.

B. Apply paint by brush, roller, air spray, or airless spray in accordance with manufacturer's directions, and recommendations of Paint Application Specifications No. 1 in SSPC Vol. 2, where applicable. Use brushes best suited for type of material being applied. Use rollers of carpet, velvet back, or high pile sheep’s wool as recommended by paint manufacturer for material and texture required. Do not use rollers having nap exceeding 3/8-inch.

©Gannett Fleming Inc. 2023

1. Apply by brush to newly welded seams.
2. Apply prime coats by roller, brush, or spray.

C. Apply paints only when temperature of surfaces to be painted and surrounding air temperatures are between 50 and 95 degrees F, and will remain in this range during curing, unless otherwise permitted by paint manufacturer's printed instructions.

D. Do not apply paint in snow, rain, fog, or mist; or when relative humidity exceeds 85 percent; or to damp or wet surfaces.

E. Painting may be continued during inclement weather only if areas and surfaces to be painted are enclosed and heated within temperature limits specified by paint manufacturer during application and drying periods.

F. Provide adequate illumination and ventilation in areas where painting operations are in progress.

G. Maintain number of coats and minimum paint film thickness per coat required regardless of application method. Do not apply succeeding coats until previous coat has completely dried or the minimum time recommended by manufacturer elapsed, whichever is longer.

H. Apply additional coats when undercoats, stains, or other conditions show through the final coat of paint, and until paint film is of uniform finish, color and appearance. This requirement is of particular importance regarding intense primary accent colors. Ensure surfaces, including edges, corners, crevices, welds, and exposed fasteners receive a film thickness equivalent to that of flat surfaces.

I. Color code all pipelines and conduits. The exceptions are that flexible connectors, flexible tubing, stainless steel, uninsulated copper tubing, and valve operators and appurtenances are not painted, unless otherwise noted on the drawings.
   1. Paint valves the same color as the pipeline. Exceptions are that brass, bronze, copper, stainless steel, PVC, valve operators, and any flexible portions of these pumps or valves are not be painted.
   2. Surfaces not exposed to view do not require color coding and in some cases do not require painting. See Materials Preparation paragraph.

J. Not Used

K. Minimum Coating Thickness: Apply each material at not less than the manufacturer's recommended spreading rate, and provide total dry film thickness as specified. In no case allow area coverage per gallon to exceed manufacturer's recommendations. Apply extra coat at no additional expense to obtain specified total dry film thickness.

L. Scheduling Painting:
   1. Apply first-coat material to surfaces that have been cleaned, pretreated or otherwise prepared for painting as soon as practicable after preparation and before subsequent surface deterioration.

©Gannett Fleming Inc. 2023

2. Allow sufficient time between successive coatings to permit proper drying. Do not recoat until paint has dried to where it feels firm, does not deform or feel sticky under moderate thumb pressure, and application of another coat of paint does not cause lifting or loss of adhesion of undercoat. In no case apply an additional coat until manufacturer's minimum recommended drying time between coats has elapsed.

M. Prime Coats: Recoat primed and sealed walls and ceilings where there is evidence of suction spots or unsealed areas in first coat, to assure a finish coat with no burn-through or other defects caused by insufficient sealing.

N. Brush Application:

1. Brush-out and work all brush coats onto surfaces in an even film. Cloudiness, spotting, holidays, laps, brush marks, runs, sags, ropiness, or other surface imperfections are not acceptable. Neatly draw all glass and color break lines.

2. Brush apply all primer or first coats, unless otherwise permitted to use mechanical applicators.

O. Completed Work: Match approved samples for color, texture, and coverage. Remove, refinish, or repaint work not in compliance with specified requirements as required by Engineer.

P. Placing Into Service: Do not place painted items into service until paints and coatings are fully cured (dry-hard).

Q. Pipe Line Identification: After finish painting, mark non-submerged piping with an applicable color band bearing the stenciled name of its contents, as approved by Owner.

1. Marker Locations: Provide markers on each pipe at the following locations.

a. Adjacent to each valve, fitting and piece of equipment.

b. At each branch and riser.

c. At each pipe passage through walls, floors, and ceilings.

d. At every 30 feet max. of straight pipe.

e. At every feed, application, and termination point.

2. Also adjacent to the color band, stencil the pipe size and an arrow indicating direction of flow in the pipe. Make the pipe size identification and flow arrow the same color as the lettering.
3. Stencil lettered legends on the piping at the horizontal or vertical center lines. Place letterings below the horizontal center line where pipelines are too close

©Gannett Fleming Inc. 2023

together or where located above normal line of vision (or above the centerline when pipeline is below the normal line of vision). Letter sizes and band widths are given in the table below.

Outside Diameter of Pipe Covering	Height of Letters	Width of Color Band
3/4 to 1-1/4 inch	1/2 inch	4 inch
1-1/2 to 2-1/2 inch	3/4 inch	6 inch
3 to 6 inch	1-1/4 inch	8 inch
7 to 10 inch	2-1/2 inch	12 inch
Over 10 inch	3-1/2 inch	12 inch

4. Place legend, pipe size and flow arrow in a location so that it can be easily read from the floor.
5. Where pipes are adjacent to each other, arrange legends neatly in line.
6. Identify pipelines less than 3 inches outside diameter with brass or aluminum tags.
7. Cleanup and retouch all affected work. Leave all grass areas, unpainted fittings, plaster surfaces, floors and walks, hardware, and other surfaces clean and free from any paint, stain, smears, spatterings or smudges.
8. Do not paint over equipment identification tags.

3.5 REPAIR/RESTORATION

A. Assume complete responsibility for quality of repaint work insofar as proper surface preparation will affect finished appearance. Quality of finishes is subject to Engineer's approval or rejection. Recoat work as a result of rejection will be at no expense to Owner.

B. Prepare previously painted surface where rust, powdering, scaling, peeling or flaking is present by wire brushing, scraping, sanding and blast cleaning to solid material. Sand solid edges smooth.

C. Prepare hard, glossy, repaint surfaces for paint adhesion by sandpapering, followed by surface washing and rinsing. When a de-glosser is used, washing and rinsing may be eliminated.

D. Just prior to application of paint or coatings, re-paint surfaces must be dry, clean and free of loose dirt, dust and grit.

E. At completion of work of other trades, touch up and restore damaged or defaced painted surfaces as determined by Engineer. Touch up filter railings after work is complete.

©Gannett Fleming Inc. 2023

3.6 FIELD QUALITY CONTROL

A. Engineer reserves right to invoke following material testing procedure at any time, and any number of times during the period of field painting:
   1. Engage the service of an independent testing laboratory to sample any paint being used. Samples of materials delivered to Project site will be taken, identified and sealed, and certified in presence of Contractor.
   2. Have independent testing laboratory perform appropriate tests for any or all of following characteristics: abrasion resistance, apparent reflectivity, flexibility, washability, absorption, accelerated weathering, dry opacity, accelerated yellowness, recoating, skinning, color retention, alkali resistance, quantitative materials analysis, and compatibility of coatings.
   3. If test results show that material being used does not comply with specified requirements, a directive may be made, at no expense to Owner, to stop painting work and remove noncomplying paint; pay for testing; repaint surfaces coated with rejected paint; remove rejected paint from previously painted surfaces if, upon repainting with specified paint, the two (2) coatings are noncompatible.

B. Notify Engineer after completion of each coat of paint. After inspection, checking of film thickness, and approval by Engineer, proceed with succeeding coat. Supply Engineer for his use a Gardner dry-film thickness gage.

C. During application of painting, have manufacturer's representative check dry mil thickness of each coating and certify to Engineer in writing that thickness is in compliance with Specifications. If deficiencies in dry mil thickness of any coat is found, correct by application of an additional coat(s) to deficient area at no additional expense. Manufacturer's representative is also to certify that all surfaces were properly cleaned prior to application of paint, specified meetings and inspections were made; quantity of paint was applied in accordance with their recommendations, and all other requirements stated in this Section were satisfactorily completed.

3.7 CLEANING

A. During progress of Work, remove from site all discarded paint materials, rubbish, cans and rags at end of each work day.

B. Upon completion of painting work, clean window glass and other paint-spattered surfaces. Remove spattered paint by proper methods of washing and scraping, using care not to scratch or otherwise damage finished surfaces.

C. Remove paint from existing structures, road surfaces, piping and other facilities which were not to be painted.

3.8 PROTECTION

A. Protect work of other trades against damage caused by painting and finishing work. Correct damages by cleaning, removing paint splatter, repairing or replacing, and repainting, as acceptable to Engineer.

©Gannett Fleming Inc. 2023

B. Provide "Wet Paint" signs as required to protect newly painted finishes. Remove temporary protective wrappings provided after completion of painting operations.

C. Protect painted surfaces from damage. Touch up and restore damaged or defaced painted surfaces as determined by Engineer.

3.9 PAINT SCHEDULE

A. General Requirements: The Engineer will select the proper painting systems from the Paint Schedule (as well as color) for such surfaces, items, apparatus, materials and equipment, which are not specifically named in the Schedule, but requiring paint according to the Engineer's direction in the field. The anachronism 'DFT' stands for dry film thickness.

B. Concrete:
1. All filter walls and troughs
a. Prime Coat: Apply a single coat of Polyamine Epoxy to DFT of 25.0 - 30.0 mils Tnemec Series 215.
b. Finish Coat: Apply a single coat of Polyamine Epoxy to DFT of 25.0 - 30.0 mils Tnemec Series 22 Epoxoline (color by owner).

C. Masonry:
1. Not Used

D. Interior, Non-Insulated, Non-Submerged or Partially Submerged Metal:
1. In filter to 1-foot above waterline - All exposed ferrous metals inside structure including, but not necessarily limited to, stainless steel compressed air piping, air vent piping, fittings, supports, hangers.

a. Prime Coat: Apply a single coat of Polyamidoamine Epoxy to DFT of 3.0 - 5.0 mils Tnemec Series N140 -44BR
b. Intermediate Coat: Apply a single coat of Polyamidoamine Epoxy to DFT of 3.0 - 4.0 mils Tnemec Series N140 -32GR
c. Finish Coat: Apply single coat of Polyamidoamine Epoxy to DFT of 3.0 - 4.0 mils Tnemec Series N140 –Color by Owner
d. Coatings shall be NSF 61 approved.

2. Above waterline - Stainless steel compressed air piping air vent piping, fittings, supports, hangers, railings.

a. Prime Coat: Apply a single coat of Polyamidoamine Epoxy to DFT of 3.0 - 5.0 mils Tnemec Series N69 -44BR
b. Intermediate Coat: Apply a single coat of Polyamidoamine Epoxy to DFT of 3.0 - 4.0 mils Tnemec Series N69 -32GR

©Gannett Fleming Inc. 2023

c. Finish Coat: Apply single coat of Polyamidoamine Epoxy to DFT of 3.0 - 4.0 mils Tnemec Series N69 –Color by Owner

E. Exterior, Non-Submerged Metal:
1. Not Used

F. Concealed Structural Steel:
1. Not Used

G. Shop Prime Aluminum (Contact Surface):
1. Not Used

H. Copper Pipe:
1. Not Used

I. Submerged Metal:
1. All submerged ferrous metal including piping and mechanical equipment, including, but not limited to piping, supports. Stainless steel compressed air piping that is submerged, shall not be coated, except where shown on drawings.

a. Prime Coat: Apply a single coat of Polyamidoamine Epoxy to DFT of 3.0 - 5.0 mils Tnemec Series N140 -44BR
b. Intermediate Coat: Apply a single coat of Polyamidoamine Epoxy to DFT of 3.0 - 4.0 mils Tnemec Series N140 -32GR
c. Finish Coat: Apply single coat of Polyamidoamine Epoxy to DFT of 3.0 - 4.0 mils Tnemec Series N140 –Color by Owner
d. Coatings shall be NSF 61 approved.

J. Insulated Piping and Equipment:
1. Not Used

K. Buried Metals:
1. Not Used

L. Outside Surface of Buried Piping, Fittings and Valves:
1. Not Used

M. Inside Surface of All Piping, Valves and Meters (unless specified otherwise for a particular type of pipe, valve or meter):
1. Not Used

N. High Temperature Surfaces:
1. Not Used

©Gannett Fleming Inc. 2023

O. Finish Coat Piping Color Table:

COLOR SCHEDULE	
WATER LINES	
Finished or Potable	Dark Blue (10SF)
OTHER	
Compressed Air – Drop Pipe	Rain Forest (Paint Code SW 4071)
Compressed Air – 90-deg. Bend and 1' above water level	White
Compressed Air – Below water level	Unpainted
Air Vent	White

END OF SECTION

©Gannett Fleming Inc. 2023

CONTROL VALVES BUTTERFLY

Project Name: NJDWSC Filter Media

Project No.: 072743 **Spec No.:** 40 91 00.801 **Rev. No.** 1

Category	No.	Item	Description	
Valve Construction	1	Tag No.	See Schedule	
	2	Type	Motor Operated Butterfly Valve	
	3	Body	Flanged, Class Required for Operating Conditions Listed in Schedule.	
	4	Disc	Cast Iron	
	5	Shaft	Stainless Steel, Straight through	
	6	Shaft Seals	Stuffing Box with V-Type Packing and Pull Down Packing Gland	
	7	Bearings	Self Lubricating Sleeve Type and Thrust Type to Keep Disc Centered in Valve Regardless of Valve Position or have Center Thrust surfaces integral to valve disc.	
	8	Valve Seats (20" and Below)	New Natural or Synthetic Rubber, Recess Mounted, Bonded and/or Mechanically Secured into Valve Body Disc to Have SS or Corrosion Resistant 80/20 Nickel/Chrome Seating Edge	
	9			
	10	Flanges	Faced and Drilled According to ANSI B16.1	
	11	Coatings - Valve and Operator	Interior and Exterior: As specified in Section 09900 of these specifications. Interior: Meet NSF-61, Latest Revision, Requirements.	
	12	Operation	"Open Left" (Counter Clockwise)	
	13	Standards	AWWA C504, Latest Revision, Rubber Seated Butterfly Valves except as modified in this Specification	
	14	Acceptable Manufacturers	DeZurik	Henry Pratt
Valve Operator	15	Type	Electric AC motor, 480 VAC Three-Phase with integral automatic circuit breaker/disconnect switch	
	16	Mounting	Bolted to valve unless otherwise noted	
	17	Display	High resolution LED display	
	18	Power Failure Mode	Remain in last position until power returns, switched to standby power, or handwheel operated through manual clutch. Motor to be disconnected automatically upon handwheel operation.	
	19	Control Signal Failure	Valve to close, unless otherwise noted: Field selectable to fail open, closed or in last position. (Valves controlled with analog signal).	
	20	Indication Contacts	Eight latching dry contact switches, independently configurable to signal valve position, status, valve alarms, actuator alarms, or service alarms.	
	21	Required Modules	Profibus DP interface module	
	22	Output	Internal potentiometer or 4-20 mA Transmitter for Valve Position Indication where noted	
	23	Operating Pressure	See Schedule	
	24	Operating Temperature	Indoor. 32 degrees F to 90 degrees F. Outdoor. 0 degrees F to 105 degrees F	
	25	Operating Time	Stop to Stop 60 seconds; Air Wash Valve – 30 seconds	
	26	Standards	AWWA C-540	

©Gannett Fleming Inc. 2023

Category	No.	Item	Description
Valve Operator (cont.)	27	Enclosure	NEMA 4
	28	Inputs	4-20 mA signal or Open/Close signals for Throttling, Switches for Open/Closed Operation where noted
	29	Adjustments	Time Delay, Deadband, Zero and Span – Valves controlled via analog signal only.
	30	Auxiliary Components	Handwheel, reversing contactors, transformers, phase discriminators, optical isolators on all signals, relays where indicated on the drawings or required. Heaters, torque switches, thermal or current overload switches, Open/Close indicating lights.
	31	Control Switches	Pad-lockable Local-Off-Remote Selector, Open-Hold-Close or Open-Close Selector (See Schedule) Remote position to have a dry contact for report back to SCADA
	32	Control Switch Mounting	Integral with Operator if Operator is mounted less than 5-feet above floor. Remote (accessible from floor) if Operator is mounted 5-feet above floor or higher. See Drawings.
	33	Throttling Service Operators	Operators for modulating service shall be rated for a minimum of 600 starts per hour for a minimum of 10 million cycles. Accuracy vs. operating time shall be + or - 1/4 percent
	34	Contactor	Solid State Contactor for all applications
	35	Spare Parts	Provide one complete spare operator of each type supplied
	36	Acceptable Manufacturers	Rotork
	37	Model No.	IQ

Notes:

1. Submittal Requirements: Provide torque requirements calculations for a valve and actuator as a matched set. Provide the torque requirement calculations for each supplied valve. Provide the rated torque output of the actuator supplied for each valve. The rated torque output of each actuator shall exceed the maximum torque requirement of the valve by at least 20%
2. Install as shown on the drawings and as recommended by the manufacturer.
3. Provide handwheels for all valves listed above.
4. Provide affidavit stating that the valves comply with all applicable provisions of the latest revision of AWWA C-504. Actuators for valves and rate of flow controllers shall be mounted on the valves at the valve manufacturer's facilities and shop tested by the valve manufacturer according to AWWA C504 procedures. Test reports for valves shall be submitted to the engineer.
5. Where practical, mechanical parts for all operators shall be identical and interchangeable.
6. Operation Legend: O = Open C = Close H = Hold MOD = Modulating
7. Valves marked with “Actuator Only” under Service are NOT being replaced. These valves will only have the existing hydraulic actuator replaced with new actuator as specified.
8. Valves NOT marked “Actuator Only” under Service are being replaced. These valves will have both the existing valve and the existing hydraulic actuator replaced with new valve and actuator as specified.
9. Actuator stroke time for filter influent valve and filter wash water (backwash supply) valve is 3 minutes and 31 seconds.
10. Actuator stroke time for filter drain valve is 3 minutes and 1 second.

©Gannett Fleming Inc. 2023

CONTROL VALVES BUTTERFLY

Project Name: NJDWSC Filter Media

Project No.: 72743 **Spec No.:** 40 91 00.801

Rev. No. 1

SCHEDULE

No.	Tag No.	Size (in.)	Max. Flow	Max. Press	Operation	Service
1		54			Modulating	Filter No. 1 – Influent Valve - (**Actuator Only**)
2		48” x 72”			Open/Close	Filter No. 1 – Drain Valve - (**Actuator Only**)
3		42”			Open/Close	Filter No. 1 – Washwater Valve **(Actuator Only)**
4		54			Modulating	Filter No. 2 - Influent Valve - (**Actuator Onl**)
5		48” x 72”			Open/Close	Filter No. 2 – Drain Valve - (**Actuator Only**)
6		42”			Open/Close	– Washwater Valve **(Actuator Only)**
7		54			Modulating	Filter No. 4 – Influent Valve - (**Actuator Only**)
8		48” x 72”			Open/Close	Filter No. 4 – Drain Valve - (**Actuator Only**)
9		42”			Open/Close	– Washwater Valve **(Actuator Only)**
10		54			Modulating	Filter No. 5 – Influent Valve - (**Actuator Only**)
11		48” x 72”			Open/Close	Filter No. 5 – Drain Valve - (**Actuator Only**)
12		42”			Open/Close	– Washwater Valve **(Actuator Only)**
13		54			Modulating	Filter No. 6 – Influent Valve - (**Actuator Only**)
14		48” x 72”			Open/Close	Filter No. 6 – Drain Valve - (**Actuator Only**)
15		42”			Open/Close	Filter No. 6– Washwater Valve **(Actuator Only)**
16		54			Modulating	Filter No. 7 – Influent Valve - (**Actuator Only**)
17		48” x 72”			Open/Close	Filter No. 7 – Drain Valve - (**Actuator Only**)
18		42”			Open/Close	– Washwater Valve **(Actuator Only)**
19		54			Modulating	Filter No. 8 – Influent Valve - (**Actuator Only**)
20		48” x 72”			Open/Close	Filter No. 8 – Drain Valve - (**Actuator Only**)
21		42”			Open/Close	- Washwater Valve **(Actuator Only)**
22		54			Modulating	Filter No. 9 – Influent Valve - (**Actuator Only**)
23		48” x 72”			Open/Close	Filter No. 9 – Drain Valve - (**Actuator Only**)
24		42”			Open/Close	– Washwater Valve **(Actuator Only)**
25		54			Modulating	Filter No. 10 – Influent Valve - (**Actuator Only**)
26		48” x 72”			Open/Close	Filter No. 10 – Drain Valve - (**Actuator Only**)
27		42”			Open/Close	– Washwater Valve **(Actuator Only)**

©Gannett Fleming Inc. 2023

SECTION 46 61 13.13

FILTER MEDIA (SAND AND ANTHRACITE)

PART 1 GENERAL

1.1 SUMMARY

A. Section Includes:
1. Removal of existing filter anthracite, and filter sand from filters as shown in contract drawings.
2. Furnishing and installing new filter anthracite, and filter sand media, as shown in contract drawings.

B. Related Sections:
1. Product Storage and Handling Requirements: Section 01 66 00.
2. General Commissioning Requirements: 01 91 13.
3. Demonstration and Testing: Section 01 79 00.

1.2 REFERENCES

A. American Society for Testing and Materials:
1. ASTM D 1109, Standard Test Method for 1% Sodium Hydroxide.

B. American Water Works Association:
1. AWWA B100 - AWWA Standard for Filtering Materials

C. NSF International:
1. NSF Listings, Drinking Water Additives - Health Effects.

1.3 SYSTEM DESCRIPTION

A. Design Requirements:
1. Provide sand and anthracite filter media for filters. Filter area is 2,319.6 square feet total (per filter) and 1,159.8 square feet (per half filter).
2. Furnish a minimum of 1 layer of silica sand and 1 layer of anthracite filter coal for each filter.
3. Engineer must approve any changes in gradation or depth.

B. Performance Requirements:
1. Nominal rated capacity of each filter:
a. 16.6 mgd at 5.00 gpm/sq. ft. filtering rate.
b. Maximum required filtering capacity: 5 gpm/sq.ft.
c. Maximum backwash rate of 18 gpm/sq.ft. is achieved.
2. Filters 1-10 Operating Conditions
a. Normal operating conditions of 8-15 mgd at 5 gpm/sq ft. filtering rate
b. Maximum conditions of 23 mgd and 6.5 gpm/sq ft. filtering rate

©Gannett Fleming Inc. 2023

3. Filters 11-13 Operating Conditions
    a. Normal operating conditions of 10-22 mgd at 6 gpm/sq ft. filtering rate
    b. Maximum conditions at 9 gpm/sq ft. filtering rate

1.4 SUBMITTALS

A. Product Data:
1. Furnish two (2) grain size distribution curves for silica sand and anthracite.
    a. Obtained from different random samples of material to be supplied.
    b. Determined by an independent soils laboratory, and based on a minimum of 10 sieve sizes between 0.05 mm. size and 2.0 mm. size of particles.
        1) Furnish weight of material retained on each sieve with distribution curves.

B. Samples:
1. Furnish samples of each layer of silica sand, and anthracite filter coal for approval. Approval based on physical samples, grain size distribution curve, and laboratory report.

C. Quality Assurance/Control Submittals:
1. Certificates: Submit following notarized certificates:
    a. Certification stating that silica sand and anthracite to be shipped has been tested in accordance with AWWA B100 and meets each and all of physical and chemical requirements of those specifications and requirements of this Section. Supply laboratory test data with certifications.
    b. Certification stating that all materials utilized in system are suitable for operation in a potable water application, and bear NSF 61 Certification if in contact with water.
2. Submit a materials handling plan with a complete description of procedures proposed for handling media on site, within water treatment plant, and during placement operations in filter boxes.

1.5 QUALITY ASSURANCE

A. Qualifications: Media systems to be standard products of a supplier who has been regularly engaged in successful production of high quality media of this type for at least ten years, has supplied such media for at least five years of ten year period, and has at least five installations in successful operation for at least five years.

B. General Requirements:
1. Media to be furnished and installed under this Section will perform final polishing process in a potable water treatment plant. Water quality requirements in this plant are very stringent with a goal of less than 0.1 NTU in filtered water. As such, filter media quality and installation are of primary importance, and conformance with all Paragraphs of these Specifications is mandatory.

©Gannett Fleming Inc. 2023

2. Conform to all Sections of AWWA Standard B100, and to supplementary specifications of this Section relative to quality of all material and method of installation. AWWA Specifications govern in event of conflict.
3. Filter media specified is a complete filtering process. Furnish from one (1) supplier, responsible for satisfactory operation of entire filtering process.
4. Each media type delivered to the site is to be from one stock pile.

C. Field Samples: Owner will secure the services of an independent testing lab to test uniformity coefficient, effective size and gradation of all delivered materials. Do not place delivered materials until testing results have been received by the Owner indicating that materials delivered to the site comply with specification requirements. Owner will then provide written notice to proceed with installation.
1. All material not in compliance with specification requirements will be removed and replaced by the Contractor at the Contractors costs.

1.6 DELIVERY, STORAGE, AND HANDLING

A. Storage and Protection:
1. Immediately after processing, bag all media for shipment or store, if shipment is to be in bulk form, in a clean and dry location.
2. Deliver, store and handle filter media in accordance with manufacturer's recommendations, and as supplemented herein:
a. Store all filter media at project site in a clean area at least 12 inches above ground and removed from other work activities.
b. Cover material to protect it from dust and other airborne contaminants, and in a manner that will protect media from precipitation.
1) Replace any material which, in opinion of Engineer, becomes contaminated with dirt or other unsanitary material at no additional cost to Owner.
c. Protect filter media from freezing.
1) Replace all media which has been subjected to freezing temperatures at no additional cost to Owner.

B. See Section 01 66 00 for general handling, storage and protection requirements.

PART 2 PRODUCTS

2.1 MANUFACTURERS

A. Acceptable Suppliers:
1. Filter media (sands and anthracite) supplied by:
a. Water Service Professionals of PA, Inc. (610) 202-7378
b. Directly from an approved underdrain supplier.

2.2 MATERIALS

A. Dual Media:
1. Filter Sand

©Gannett Fleming Inc. 2023

a. Composed of hard, durable silica grains, either rounded or angular in shape. Not more than 1 percent by weight to be flat or micaceous. Free from dust and organic matter. 95 percent insoluble in a 24-hour bath in warm hydrochloric acid. Specific gravity equal to or greater than 2.6.
b. Uniformly graded with an effective size not greater than 0.50 mm, nor less than 0.40 mm. Uniformity coefficient less than 1.50. Uniform distribution of grain size between D10 and D60 size material. Ratio between D20 size and D10 size less than 1.15. Not more than 10 percent by weight larger than 0.85 mm.

2. Anthracite Filter Coal
   a. The anthracite filter coal shall be obtained from an approved source and must be clean and free from long, thin, or scaly pieces. It shall have a hardness of 3.0 to 3.75 on the MOH scale, and a specific gravity of not less than 1.55. It shall be free from iron sulfide, clay, shale, or extraneous dirt. Its solubility shall be less than 2 percent after 24 hours in 20 percent hydrochloric acid at 70 degrees F., and less than 2 percent after 24 hours in hot (190 degrees F.), 1 percent sodium hydroxide when tested in accordance with ASTM D 1109.
   b. The coal shall be uniform graded with an effective size not less than 0.90 mm., or greater than 1.00 mm. The uniformity coefficient shall not be greater than 1.40, and there shall be a uniform distribution of grain size between the D10 and D60 size material. The ratio between the D20 and D10 sizes shall not be greater than 1.15. Not more than 10 percent by weight of the anthracite shall be larger than 1.85 mm.
3. Media depths.
   a. Filter Sand: 12 inches, measured from top surface of underdrain to the top of the sand surface. Void area between and below new underdrain also shall be filled with new sand.
   b. Anthracite Coal: 24 inches.

PART 3 EXECUTION

3.1 REMOVAL

A. Remove all anthracite, sand, and existing gravel material to expose the entire filter underdrain. Media may be disposed of onsite. Inspect and repair the filter box as required.

B. Upon removal of gravel layers from the filters, remove all debris, clean, power wash all surfaces within the filter box, as required.

3.2 INSTALLATION

A. New underdrain system shall be installed, tested and approved before starting media placement.

B. Replace any media material on project site which, in opinion of Engineer, is not equal to that approved for use.

©Gannett Fleming Inc. 2023

C. Handle materials to keep them clean during placement. Remove and replace any dirty material or wash under technical direction of media supplier.

D. Media Installation:
   1. Handle filter sand outside bed in bag or bulk form. Deposit filter sand by hand, hydraulically or pneumatically.
   2. Upon completion of placement of filter sand, thoroughly backwash, beginning with a very slow rate of wash and increasing gradually until bed is expanded about 30 percent. Wash for approximately 15 minutes. Initial backwash rates, gradual increases and maximum rate in accordance with AWWA B 100 Section 4.1.2. Adjust as required for density and effective size of filter sand specified.
   3. After backwashing, drain bed and remove fines from top of bed.
   4. Backwash filter again and remove any additional fines.
   5. Repeat process until surface of bed is satisfactory to Engineer.
   6. If top of filter sand is not at prescribed depth in filter, remove excess sand or add clean sand. If additional sand is added, backwash filter and remove fines as specified above until approved by Engineer. If sand is to be removed, do so by coring to 75 percent of full depth in sufficient number of areas to reduce levels to prescribed height. Redistribute filter sand and backwash.
   7. Place anthracite coal upon silica sand in a manner similar to silica sand.
   8. After anthracite coal has been deposited, backwash filter and remove fines and dust by skimming. A minimum of two backwashing and skimmings required.
   9. Obtain proper level of anthracite coal in manner similar to silica sand.

E. During media placement it is critical that air in wash water mains and underdrain system is released prior to introduction of wash water for media placement. Air in system can cause media to be upset requiring removal and reinstallation of media. In order to minimize this potential, adhere to following:
   1. Check operation of wash water pumps and all air release/vacuum and butterfly valves prior to installation of any filter media. Verify proper control of filter wash water valves and filter rate of flow controllers, either manually or via instrumentation system.
   2. Operate valves <u>very</u> slowly during flushing of underdrain system and subsequently during washing of any filter media.
   3. After first cracking open valves and allowing water to flow into underdrain system, allow adequate time for air to escape from underdrain system at that flow rate prior to opening valves farther and increasing rate of flow. Incremental movement of valves should not exceed 5 percent, particularly until valve has been opened to approximately 25 percent range and it is obvious that all air has been removed from system.
   4. Whenever possible, allow water to remain in underdrain system between washes. This will minimize amount of air that gets into underdrain system and reduce subsequent turbulence during initial part of backwash cycle.

F. After all media has been placed and brought to specified gradation, fill entire filter with water and maintain in this condition until disinfection takes place.

©Gannett Fleming Inc. 2023

3.3 DISINFECTION

A. After all work is completed and before filters are placed in service, disinfect each filter in accordance with the most current version of AWWA Standard C653 – Disinfection of Filters, and as follows:
   1. Inject sufficient chlorine into wash water to produce a solution having a chlorine concentration of at least 25 mg/l throughout filter and the underdrain.
   2. Keep chlorinated water in filter for a minimum of 12 hours, at which time a 15 ppm concentration shall remain.
   3. After disinfection, backwash filter to remove chlorinated water until chlorine residual in filter water is 2 mg/l.
   4. Maintain 2 mg/l chlorine in filter water until filter placed in service.
   5. Disinfection shall be implemented by the Owner.

3.4 FIELD QUALITY CONTROL

A. System Performance Evaluation:
   1. General Requirements: See Section 01 91 13.

B. Manufacturer's Field Services:
   1. General Requirements: See Section 01 79 00.
   2. Time Periods:
      a. Initial Operation, Initial and Final Mechanical Performance Testing: one (1) man-day.
         1) Have media supplier provide services of an experienced qualified technician to continuously supervise installation of media systems. After installation is complete, have supplier certify that media was installed in a proper manner, meets gradation requirements, and is approved by them.
         2) Submit supplier's certificate stating media was installed in accordance with Specifications, meets graduation requirements, and is approved by them.

END OF SECTION

©Gannett Fleming Inc. 2023

SECTION 46 61 14

FILTER UNDERDRAIN SYSTEM

PART 1 GENERAL

1.01 SUMMARY

A. Section Includes: Requirements for filter underdrain system as shown on drawings.

B. Related Specification Sections:
1. Demonstration and Testing: Section 01 79 00.
2. Grouting: Section 03 60 00.
3. Filter Media: Section 46 61 13.13.

1.02 SYSTEM DESCRIPTION

A. Filter underdrain and air wash system to be installed in the following:

Filters	
Type	Conventional type media filters
Number	Filters as shown in contract drawings
Dimensions (per cell) - Filter Length, feet - Filter Width, feet - Filter Area, Each Cell, sq. feet Dimensions (per Filter) - Filter Length, feet - Filter Width, feet - Filter Area, Each Filter, sq. feet	 19.33 60 1159.8 38.66 60 2319.6

B. The filter underdrain system will support a dual media bed cleaned by water backwash, air scour, or a combination of the two. The intent of this specification is to obtain a filter underdrain capable of being an integral part of a complete filter system that will effectively remove turbidity, have long filter run times, and have low backwash water requirements.

C. Design parameters are as follows:

Maximum filtration rate (Filters 1-10)	6.5 gpm/ft^2
Maximum filtration rate (Filters 11-13)	9 gpm/ft^2
Maximum backwash rate	20 gpm/ft^2
Design underdrain system air scour air pressure drop (excludes static head)	1.5 psig
Maximum air scour rate	5 scfm/ft^2

©Gannett Fleming Inc. 2023

Sand media depth above the underdrain laterals	12 inches
Filter coal media depth	24 inches

D. There shall be furnished a filter underdrain system for a total of four (4) filters, or as shown on the contract drawings, each having two (2) cells. Filter underdrain systems shall be installed as shown on the Contract Drawings. The underdrain system shall include from a single source all items, materials, fasteners, and sealants within the filter cell to collect filtered water, uniformly distribute backwash air and water, retain the filter media, and to retain, support, and seal the filter underdrain system to make it complete and operable.

E. The filter underdrain system shall be designed to avoid localized areas of excessive backwash flow that may cause mounding or other deleterious disturbance of the filter media.

F. The filter underdrain system will be designed to accommodate a maximum internal pressure of 10 psi and deliver the specified underdrain performance without leaking the specified filter media into the underdrain system. The entire filter underdrain system shall be designed to withstand, with a prudent safety factor, intermittent operation, or continuous 24 hour per day operation.

G. The ability to efficiently repair the filter underdrain system if that becomes necessary is a key aspect of this project. Anchorage and assembly must be designed so that all elements of the filter underdrain system can be removed for repairs and/or cleaning and reinstalled without damaging any stainless steel filter underdrain system components, concrete, or grout

1.03 SUBMITTALS

A. Submit in accordance with these Specifications, shop drawings for the filter underdrain system and air wash system demonstrating compliance with these Specifications, including:
   1. Manufacturer's descriptive literature, specifications and engineering data defining filter underdrain materials, dimensions, construction, weight and flow rate versus pressure.
   2. Layout drawing of filter underdrain system and reinstalled/modified air piping.
   3. Manufacturer's test records from an independent hydraulic laboratory, demonstrating the equalization of backwash flow under conditions at least equivalent to the layout for this project.
   4. Detailed general arrangement drawings showing the filter underdrain system configuration, and sufficient information describing the underdrain components to determine compliance with the specifications.
   5. Structural calculations verifying the underdrain system anchorage.
   6. Detailed installation instructions specific for this project.
   7. Field testing procedures for this project.
   8. Certified media analyses.

©Gannett Fleming Inc. 2023

9. Certification of NSF 61 Listing for filter underdrain and filter media.
10. Catalog Data consisting of specifications, illustrations and a parts schedule that identifies the materials to be used for the various system components and accessories.
11. Submittal information must be stamped by a Registered Professional Engineer employed by the underdrain system manufacturer.

B. Furnish in accordance with these Specifications manufacturer's installation certificate for all underdrain and reinstalled/modified air piping.

C. Operation and Maintenance Manuals shall be furnished.
   1. Operation and maintenance manuals shall be provided by the equipment manufacturer at least two weeks prior to shipment of all major equipment components. Manuals shall be submitted electronically in bookmarked Adobe Acrobat format.
   2. As a minimum the manual shall contain:
      a. General arrangement drawings.
      b. General arrangement detail drawings.
      c. A complete bill of materials for the equipment.
      d. Safety data sheets for all items of equipment purchased from other manufacturers.
      e. Installation and maintenance instructions for the specific equipment including the assembly sequence, maintenance items, storage instructions, and trouble-shooting checkpoints.

1.04 QUALITY ASSURANCE

A. The filter underdrain system shall be designed to ensure long-term functional stability in terms of its operating characteristics. Under customary filter operating and environmental conditions, the filter underdrain system shall be resistant to changes in head loss, flow uniformity, corrosion, and any other effects which would in time cause loss of efficiency or effectiveness of its operation.

B. All components that comprise the filter underdrain system shall be designed and furnished by a single manufacturer. The manufacturer shall be responsible for the compatibility of all underdrain components. In addition, the manufacturer must be regularly engaged in the manufacture of similar filtration equipment.

C. Lateral orifice sizing and spacing must be verified with sizing calculations done specifically for this project. If requested by the Owner or Engineer, a factory backwash distribution test must be performed to verify that the underdrain lateral orifice configuration used for this project is able distribute backwash flow within the specified variance of ±3%. The Owner and Engineer will be given two weeks' notice in advance of finalizing orifice sizing and they may elect to schedule witness factory backwash distribution testing at their discretion. A written report presenting factory backwash testing results will be forwarded to the Engineer.

©Gannett Fleming Inc. 2023

D. The manufacturer of the filter underdrain system will modify its standard equipment to meet the minimum values specified for dimensions, design, and intent of this specification.

E. All welding shall be performed in accordance the previously listed codes and specifications. Welding shall be in accordance with qualified Welding Procedure Specifications (WPS) with Procedure Qualification Records (PQR) and Welder Performance Qualifications (WPQ) records maintained and available for review.

F. In order to ensure that a consistent level of quality is maintained with appropriate record keeping and corrective action procedures, all welding must be performed in a facility that is ISO 9001 certified.

G. The manufacturer must have regularly been involved in providing filter underdrain systems for a period of five (5) years with valid reference projects installed in at least ten (10) separate sites. Valid references for fulfilling this requirement must use a stainless steel product identical to the product being offered for this project and projects must be of a size and scope of work that allows performance to be reasonably compared to this project.

H. Identifying a manufacturer by name in these specifications indicates that the manufacturer is regularly engaged in the manufacture of filter underdrain systems. The Engineer has not reviewed manufacturer product offerings in detail and makes no representation regarding the ability of manufacturers identified by name in these specifications to provide a product that meets these specifications. The appearance of a manufacturer's name in these specifications in no way relieves the manufacturer from the obligation to provide a product that meets the detailed requirements of these specifications.

1.05 DELIVERY, STORAGE AND HANDLING

A. Deliver, store and handle the filter underdrains in accordance with the manufacturer's recommendations, and as supplemented herein:
   1. All components must be crated and adequately marked for ease of assembly.
   2. The filter underdrain system shall be installed immediately upon receipt from the manufacturer or stored in strict conformance with storage recommendations provided by the manufacturer in the operations and maintenance manual.
   3. Do not store or place any other units or materials on top of the filter underdrains.
   4. Store filter underdrains in heated room. Do not allow temperature to drop below 32 degrees F.

PART 2 PRODUCTS

2.01 GENERAL

A. The filter underdrain system shall include a series of laterals acting as pressure vessels and analyzable as such.

©Gannett Fleming Inc. 2023

B. The laterals must compensate for water velocity and momentum changes during backwashing operations by varying the size of the orifices along the lateral length. The height of the laterals shall not exceed 6 inches.

C. The filter underdrain system shall be designed to sustain an operating differential pressure of 10 psi across the laterals and remain fully functional.

2.02 LATERALS

A. Laterals shall be one-piece cross-section containing two separate compartments and an integral stainless steel bottom to provide structural rigidity and preclude having to try to seal laterals to the filter floor. In order to minimize wave action during air scouring resulting in deleterious movement of filter media and excessive instantaneous structural loads, laterals must be designed to preclude wave action by having completely separate dedicated conduits for air and water. The water conduit must make provisions to vent any air which might be trapped in the backwash piping during backwashing operations.

B. Laterals must be evenly spaced across the filters on nominal 12 inch centers but in no case will the center-to-center spacing exceed 12 and 1/2 inches. The centerline of laterals adjacent to a wall may not be more than 6 and 1/2 inches from the wall. Laterals will extend to within a nominal distance of 3 inches from the filter wall to all points along the ends of the lateral to allow for unevenness of the filter walls and/or floor. If necessary, lateral ends will be mitered to maintain this nominal distance. All laterals will be fabricated to be flat to within 0.03 inches per lineal foot of underdrain lateral.

C. Separate orifices shall be provided down the length of the filter underdrain system laterals with one set of orifices controlling the distribution of air and another set of orifices controlling the distribution of water. Orifices controlling the flow of backwash water must be custom sized specifically for this project such that their diameter varies down the length of the underdrain lateral insuring even distribution of backwash flow. Orifice sizing and spacing must be designed such that the laterals can distribute backwash water with a maximum variance of ±3%.

D. Media retaining slots shall be 0.25 millimeters (+/- 0.05 mm) and shall be integrally fabricated with the laterals to support filter media without the need for filter gravel while allowing passage of water for filtered water collection and backwashing. In order to ensure that filter media does not pass through an inadvertently flared slot, slots may not be burned/laser cut. Media retention slots that are manufactured separate from the laterals and then mechanically attached to the lateral will not be allowed because of their propensity to separate from the laterals during air scouring.

E. In order to maintain the structural integrity of the underdrain system and prevent misalignment of lateral segments during filter operations, all connections between lateral segments must but made with bolted and gasketed flanges. Lateral ends will be fully sealed with an end cap that is welded in place.

©Gannett Fleming Inc. 2023

F. Laterals will be designed with sufficient structural integrity that no modulation of air scour airflow is required to protect them.

G. Manufacturer:
   1. The filter underdrain system shall be designed and manufactured by the following:
      a. AWI (Anthrathech) U.S. Inc. of Salt Lake City, UT.

2.03 BACKWASH FEED CONFIGURATION

A. A stainless steel feedbox will be attached to the filter walls and floor to collect and evenly distribute backwash water and air scour air. Separate distribution conduits must be provided for air and water to prevent destructive wave action caused by an air/water interface.

B. Each lateral shall have a dedicated feed primary orifice on the feedbox designed to evenly collect filtered water from and distribute backwash water to each lateral by compensating for velocity and momentum changes during delivery of backwash water to the laterals. Orifice size and spacing will be calculated to meet the specific needs of this project. Primary orifices will be changeable in the field in the event adjustments must be made in response to field testing.

C. A separate air channel will be integrated into the feedbox for distribution of air scour air to the underdrain laterals. Air channels must be sized such that the maximum velocity in the air channel is 100 feet per second or less.

D. Each lateral will include an air connection specifically for the air conduit in that lateral with an orifice to insure even distribution of air to the lateral during air scouring.

E. The connection between the feedbox and the underdrain laterals will be made using a male/female capture flange including a natural sponge rubber gasket fully capable of sustaining the full design differential pressure of the underdrain system.

F. Underdrain laterals will be sealed using an NSF61 compliant gasket installed with an appropriate sealant.

2.04 AIR SCOUR CONFIGURATION

A. Lateral air feed orifices will be located at the connection point between the lateral and the feedplate. Orifice size and spacing will be calculated to meet the specific needs of this project.

B. The air feed orifice will be located such that air is metered through the orifice into the separate air channel integrated into the underdrain laterals for distribution of air scour air. Air channels must be sized such that the maximum velocity in the air channel is 100 feet per second or less.

©Gannett Fleming Inc. 2023

2.05 AIR SCOUR PIPING

A. Properly sized air scour piping as shown on the Contract Drawings shall be supplied to provide air for scouring to each lateral.

B. All air feed piping and air conduits must be sized such that air flow velocities are kept below 100 feet per second at the design maximum air scour rate.

C. Air shall exit the bottom of the header to prevent wave action and loss of effective cross-sectional area in the air header.

D. The air header shall be constructed of type 304L stainless steel and shall be schedule 10 minimum.

2.06 STRUCTURAL REQUIREMENTS

A. The entire underdrain system must remain operational when exposed to a design difference in pressure of 10 psi between the pressure inside the underdrain system and the pressure outside of the underdrain system. This design pressure is based upon a 10 psi pressure differential applied to a fully plugged underdrain system.

B. Anchorage to the floor will be accomplished through the use of adhesive type anchor bolts with hold down clamps. Primary floor anchor bolts around the flume will not be less than 1/2 inch in diameter. Secondary floor anchors for the laterals away from the flume will not be less than 1/2 in diameter.

C. Adhesive anchor bolts must be set according to instructions provided by the manufacturer using adhesives supplied by HILTI.

D. Anchorage to walls will be accomplished through the use of wedge anchors. Wall anchors will not be less than ½ inch in diameter.

E. Grout may be used only for the purposes of leveling and/or providing a smooth sealing surface. Due to its inherent weaknesses and history of contributing to filter underdrain failures, grout placed in tension may not be relied upon in any way to contribute to structural integrity when developing structural calculations.

F. All anchors must be torqued according to the manufacturer's recommendations using a torque wrench.

2.07 MATERIALS

A. All fabricated items inside the filters will be constructed from 304L stainless steel material.

B. All fasteners inside the filters will be constructed from 304 stainless steel.

©Gannett Fleming Inc. 2023

C. All attachments and connection points shall be properly sealed to prevent media leakage.

D. The manufacturer will supply all materials necessary for properly installing anchors according to HILTI instructions including:
   1. Anchor bolts
   2. Adhesive
   3. Adhesive applicators
   4. Hole brushes
   5. Hole brush handles

E. All sealed connections will be gasketed. Gaskets will be installed with a sealant provided by the manufacturer to insure a proper seal.

F. All fabricated stainless steel will be passivated according to the ASTM 380 standard for mechanical descaling.

G. All materials in contact with water must be certified to NSF 61.

H. A reasonable amount of surplus hardware, sealant, and gasket materials are supplied to assure sufficient material to complete the assembly and installation.
   1. 2% more anchor bolts that the quantity shown on the manufacturer's drawings
   2. 2% more assembly bolts than the quantity shown on the manufacturer's drawings
   3. 2% more sealant than is needed for installation as shown on the manufacturer's drawings
   4. 2% more gasket material than is shown on the manufacturer's drawings

PART 3 EXECUTION

3.01 INSTALLATION

A. The underdrains shall be installed in accordance with the manufacturer's recommendations as approved by the Engineer.

B. Prior to installation of the underdrain system, the Contractor shall vacuum clean all surfaces that might come in contact with the filtered water or backwash water. Backwashing will be performed until the backwash circuit is clean to a degree acceptable to the underdrain system manufacturer.

C. Following media placement, the media shall be thoroughly washed and cleaned in accordance with recommendations from the filter media supplier.

D. Prior to installation of filter media, a field service representative employed directly by the underdrain system manufacturer shall inspect the filter underdrain system, make necessary final adjustments, and certify the equipment ready for operation.

©Gannett Fleming Inc. 2023

E. Field welding will not be allowed unless permission is granted by the Engineer for the express purpose of making repairs after the underdrain system components have arrived on site.

3.02 SERVICE

A. The equipment manufacturer shall supply a factory trained field service representative to inspect installation of the filter underdrains. In addition, the field service representative shall instruct the owner's personnel in the proper operation and maintenance of the filter underdrains. Installation supervision described in these specifications can be accomplished in 30 days of service delivered in 8 separate trips; therefore, the manufacturer must provide these service days and trips.

B. Qualified field service representatives must have a minimum of three (3) years of experience installing the specific filter underdrain product provided for this project.

C. At the start of the filter underdrain installation process, a field service representative employed by the filter underdrain manufacturer will inspect the first filter and filter underdrain components to be installed in it to verify that the filter has been properly cleaned and the filter underdrain components are prepared for installation instructing the installing contractor’s personnel in what to observe and document. The field service representative will train the personnel performing the installation of the filter underdrain system in the proper procedures for installation.

D. The Contractor shall take all necessary precautions recommended by the filter underdrain manufacturer to ensure that the backwash system and air piping are completely clean and free of any debris, dirt, or other foreign materials which could clog the underdrain system or interfere with flow. Backwash air and water piping shall be thoroughly flushed clean. Cleaning of the first filter to be installed shall take place in the presence of the manufacturer’s field service representative to establish the level of cleanliness required.

E. A qualified field service representative employed by the filter underdrain manufacturer will supervise installation of at least a portion the first filter underdrain system to ensure that proper installation procedures are being followed. Upon completion of installation of the filter underdrain systems, the field service representative will provide a full and complete test report for each test performed. Completion of the filter underdrain system installation process is signified by a signed certification indicating that the filter underdrain systems are properly installed, the filter underdrain warranty is in force, and the filter underdrain systems are ready to be put into service.

F. Service by a representative of the filter underdrain manufacturer who is not a direct, full time employee of the filter underdrain manufacturer is not acceptable

3.03 FILTER UNDERDRAIN WARRANTY

A. The filter underdrain manufacturer’s warranty will extend for a period of five (5) years from the date that the document certifying that the filter underdrains are properly

©Gannett Fleming Inc. 2023

installed is signed. The filter underdrain warranty will cover the cost of the following items:

1. Repair or replacement at the sole discretion of the filter underdrain system manufacturer of any failed filter underdrains, fasteners, and appurtenances supplied by the filter underdrain manufacturer.
2. Any movement or removal of filter media necessary to effect needed repairs.
3. Removal of any filter underdrain components and appurtenances which have failed to provide proper service including any required demolition.
4. Reinstallation of repaired or replaced filter underdrains.
5. Reinstallation of any filter media removed for the purpose of the covered warranty work.

B. The filter underdrain manufacturer will guarantee the functional integrity of the filter underdrains and underdrain system when that system is subjected to operating differential pressures up to 10 psi as measured in the feed piping which supplies backwash water to the filter underdrains. (This statement should be interpreted to mean that with all of the media retention shots plugged a static head of 23 feet can be applied to the filter underdrain system without the filter underdrain system sustaining damage.) This guarantee does not apply to damage caused by water hammer events.

C. The filter underdrain manufacturer is not responsible for the concrete to which the filter underdrain system is attached under the terms of this warranty. The filter underdrain manufacturer will not be responsible if contaminated backwash water causes the underdrains to plug with the result that differential pressures are in excess of the specified design pressure. System operating pressures within the filter underdrains will be continuously monitored and recorded by the user.

D. The filter underdrain manufacturer will pay the cost of all warranty related repairs as defined by the filter underdrain system manufacturer and the Owner will not be required to pay for any of the warranty-related activities identified in this warranty statement. The Owner will be responsible for providing a nearby laydown area for the storage of filter media removed during any warranty related activities as well as any utilities required to perform the warranty work

3.04 PERFORMANCE DEMONSTRATION TEST

A. After start-up and prior to final acceptance, the Contractor shall conduct an Engineer witnessed performance demonstration tests on the filter underdrains in one of the filters selected by the Engineer.

B. Uniformity of backwash water distribution for one filter shall be confirmed to be within the allowed variance of ±3% by isolating and sealing four (4) separate minimum two thirds of a square foot segments of the filter and directly measuring the rate of flow in each segment. Measurement in each segment will be accomplished by timing the rate of liquid level rise within the segment. Pressure measured inside a filter underdrain is not proportionate to the key backwash flow parameter. As a result, measurement of pressure in an attempt to infer backwash rate of flow is not acceptable.

©Gannett Fleming Inc. 2023

C. After even distribution of backwash flow has been established and visually confirmed and before the filter media is put into the filter, the filter underdrain system shall be tested for uniform air scour distribution and combined air scour water backwash distribution. For the air distribution test, the filter cell shall be flooded to a level approximately 6 to 9 inches above the top of the underdrain. The air flow rate shall be slowly increased to the specified air only rate, and sustained for approximately 2 minutes while visual observations are made. While continuing to air scour at the specified air scour rate, backwash water will be introduced into the filter at a backwash rate of 4 to 8 gpm/ft2 in conjunction with the air while the level in the filters rises to the bottom of the filter troughs. Within seconds of the introduction of air for air scouring and throughout the test, the surface of the filter will appear stable with uniform agitation and no evidence of dead spots or surging. The test shall be witnessed and certified by a manufacturer's field service representative.

D. The testing protocol to be executed by the manufacturer will be submitted for approval to the Engineer. Test procedures shall be submitted to the Engineer for approval with submittal drawings. Tests will be scheduled with the Engineer at least two (2) weeks prior to the planned test date.

E. The field service representative shall submit to the Engineer a written report stating that the filter underdrain systems have been checked and are suitable for operation.

F. Inspection by a representative of the manufacturer who is not a direct, full time employee of the manufacturer is not acceptable.

END OF SECTION

©Gannett Fleming Inc. 2023

EXHIBIT "B"

PLANS

NORTH JERSEY DISTRICT WATER SUPPLY COMMISSION

WANAQUE, NEW JERSEY

FILTER REHAB

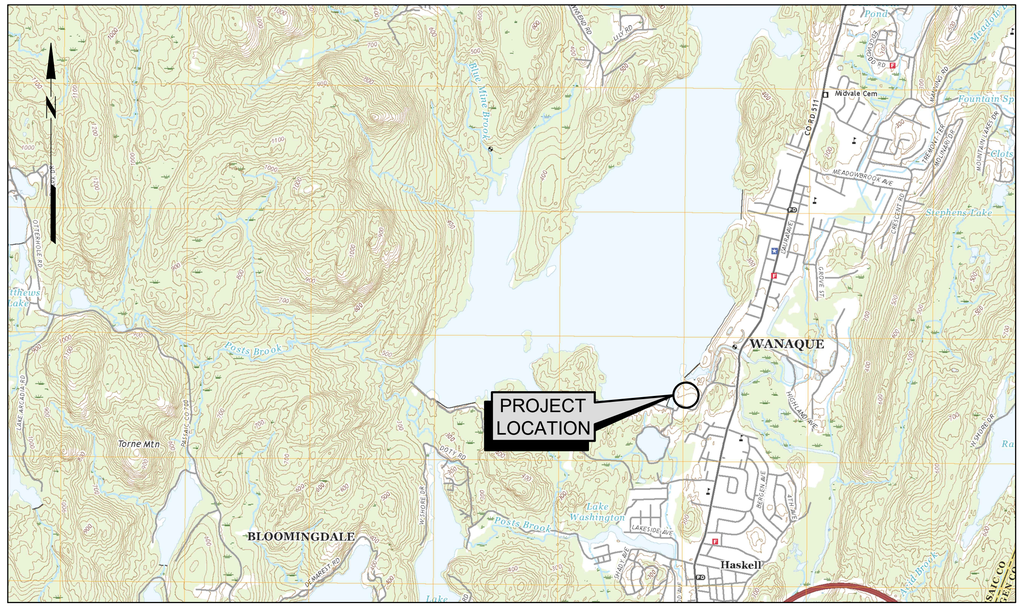

LOCATION MAP

SCALE: 1" = 2000'

2000 -0- 2000 4000

INDEX OF DRAWINGS

SHEET NO.	TITLE
	GENERAL
-	COVER
G-1	FLOW DIAGRAM
G-2	FILTER BUILDING FLOOR PLAN
	PROCESS
P-1	PROCESS LEGEND AND ABBREVIATIONS
P-2	PROCESS PIPING SYMBOLS
P-3	FILTERS 1-10 - DEMOLITION PLAN
P-4	FILTERS 1-10 - DEMOLITION SECTIONS
P-5	FILTERS 11-13 - DEMOLITION PLAN
P-6	FILTERS 11-13 - DEMOLITION SECTIONS
P-7	FILTERS 1-10 - PLAN
P-8	FILTERS 1-10 - SECTIONS
P-9	FILTERS 11-13 - PLAN
P-10	FILTERS 11-13 - SECTION
P-11	MISCELLANEOUS DETAILS
P-12	PLAN
P-13	SECTIONS
	ELECTRICAL
E-01	SYMBOLS AND ABBREVIATIONS
E-02	NOTES
ED-01	BASEMENT DEMOLITION PLAN
ED-02	GROUND FLOOR DEMOLITION PLAN
E-03	BASEMENT POWER PLAN
E-04	GROUND FLOOR POWER PLAN
E-05	SECTIONS PLANS
E-06	PANEL SCHEDULE
E-07	SCHEMATIC WIRING AND CONDUIT ROUTING DIAGRAMS
E-08	DETAILS

COMMISSIONERS

DR. HOWARD L. BURRELL
CHAIRMAN

CHARLES P. SHOTMEYER
VICE CHAIRMAN

ALAN S. ASHKINAZE
COMMISSIONER

JEROME P. AMEDEO
COMMISSIONER

DONALD C. KUSER
COMMISSIONER

ROBERT C. GAROFALO
COMMISSIONER

JAMES L. CASSELLA
COMMISSIONER

72743

AUGUST 2023

GANNETT FLEMING

BID SET

HARRISBURG, PENNSYLVANIA

FILE PATH: C:\Users\mkline\ACCDocs\GANNETT FLEMING INC\072743-NJDWSC_Filter_Rehab\Project Files\Design\ES\WTR\Wrkg\72743COVER.dwg
DATE SAVED: 7/28/2023 10:39 AM BY: mkline DATE PLOTTED: 7/28/2023 11:32 AM

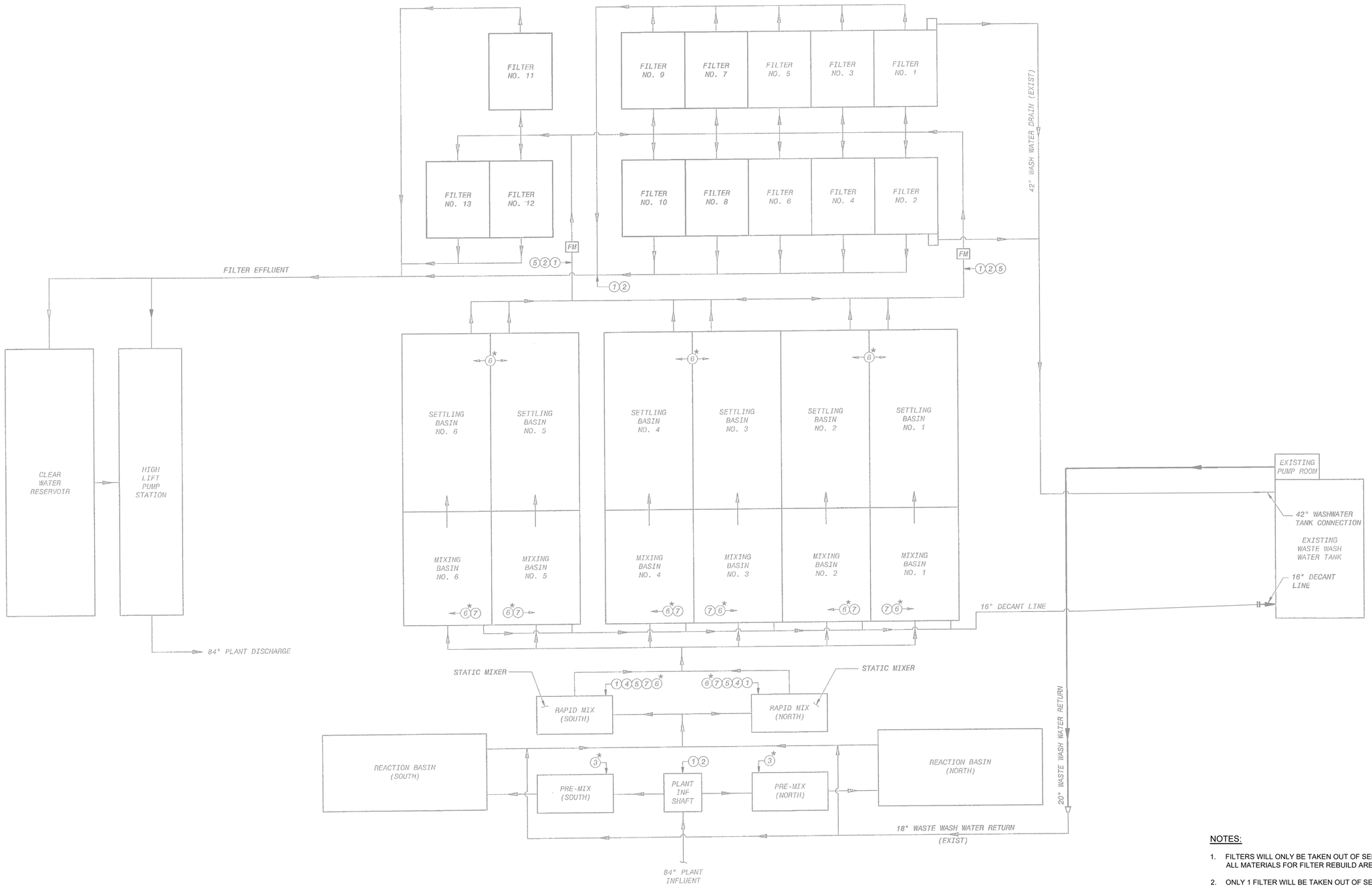

NOTES:

1. FILTERS WILL ONLY BE TAKEN OUT OF SERVICE ONCE ALL MATERIALS FOR FILTER REBUILD ARE ON-SITE.
2. ONLY 1 FILTER WILL BE TAKEN OUT OF SERVICE AT A TIME.
3. REHABILITATED FILTERS WILL REQUIRE A TEST/EVALUATION PERIOD PRIOR TO THE RELEASE OF ANOTHER FILTER. IT IS ENVISIONED A 1 WEEK PERIOD TO EVALUATE FILTER AND PROVE PERFORMANCE.

BID SET

THIS DRAWING IS AND SHALL REMAIN THE PROPERTY OF GANNETT FLEMING, INC. ANY MISUSE, REUSE, ALTERATIONS, ADDITIONS, AND/OR DELETIONS OF THESE DRAWINGS ON PROJECT EXTENSIONS OR OTHER PROJECTS SHALL BE AT THE USER'S SOLE RISK AND WITHOUT LIABILITY TO GANNETT FLEMING, INC. IN THE EVENT THAT A CONFLICT ARISES BETWEEN THE SEALED DRAWINGS AND THE ELECTRONIC FILES, THE SEALED DRAWINGS WILL GOVERN.

CHRISTOPHER P OLSON
LICENSED PROFESSIONAL ENGINEER
NO. 24GE04587900
CERTIFICATE OF AUTHORIZATION NO. 24GA28032500
2 EXECUTIVE DRIVE, SUITE 100
MARLTON, NEW JERSEY 08053

© GANNETT FLEMING, INC. 2022

No.	DESCRIPTION	DATE	BY

REVISIONS

DESIGNED	CADD	SCALE
L.L.K.	M.T.K.	AS NOTED
CHECKED	APPROVED	APPROVED
M.J.M.	-	X.X.X

GANNETT FLEMING

HARRISBURG, PENNSYLVANIA

NORTH JERSEY DISTRICT WATER SUPPLY COMMISSION
WANAQUE, NEW JERSEY

FILTER REHAB

GENERAL
FLOW DIAGRAM

JOB No. 72743

DATE AUGUST 2023

SHEET No. G-1

FILE PATH: C:\Users\mkline\ACCDocs\GANNETT FLEMING INC\072743-NJDWSC_Filter_Rehab\Project Files\Design\ES\WTR\Wrkg\72743G1.dwg
DATE SAVED: 7/28/2023 10:39 AM BY: mkline DATE PLOTTED: 7/28/2023 11:33 AM

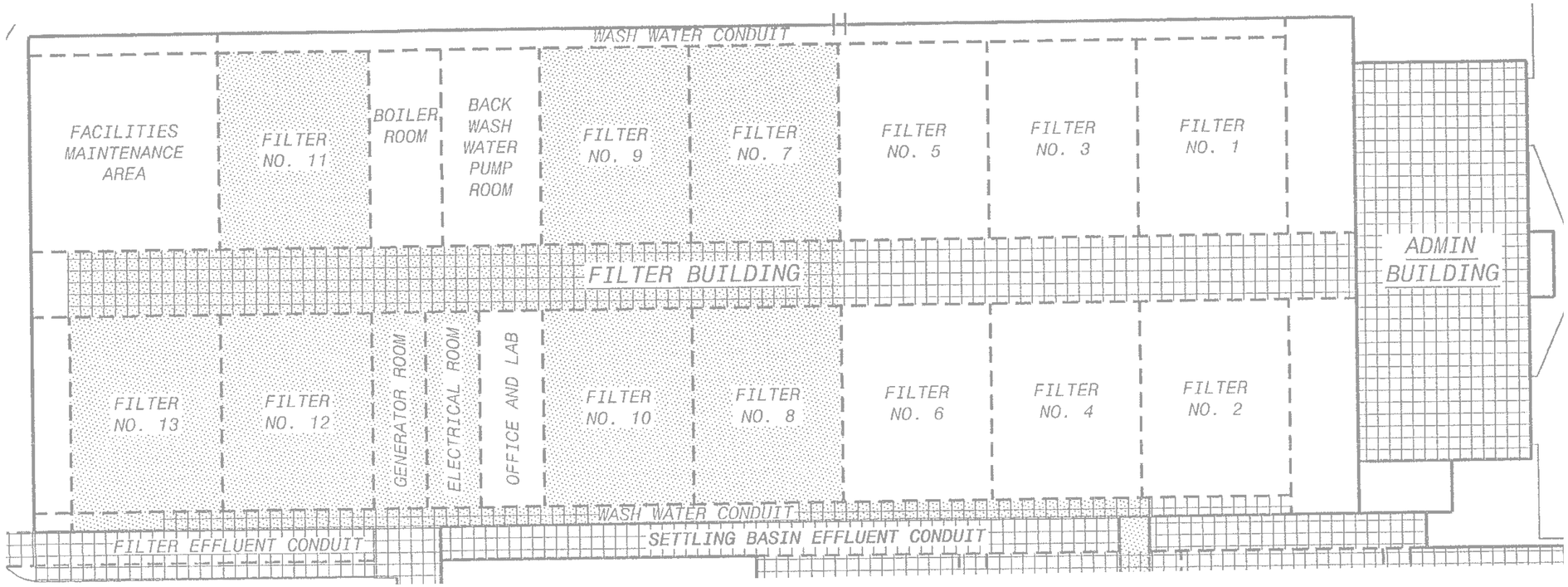

PLAN

NO SCALE

FILTER STATUS SCHEDULE		
	FILTER REHABILITATION	ACTUATOR REPLACEMENTS
FILTER 1	COMPLETE	-
FILTER 2	-	-
FILTER 3	COMPLETE (2022)	COMPLETE (2023)
FILTER 4	-	-
FILTER 5	-	-
FILTER 6	-	-
FILTER 7	-	-
FILTER 8	-	-
FILTER 9	-	-
FILTER 10	-	-
FILTER 11	-	COMPLETE
FILTER 12	-	COMPLETE
FILTER 13	-	COMPLETE

THIS DRAWING IS AND SHALL REMAIN THE PROPERTY OF GANNETT FLEMING, INC. ANY MISUSE, REUSE, ALTERATIONS, ADDITIONS, AND/OR DELETIONS OF THESE DRAWINGS OR OTHER PROJECTS SHALL BE AT THE USER'S SOLE RISK AND WITHOUT LIABILITY TO GANNETT FLEMING, INC. IN THE EVENT THAT A CONFLICT ARISES BETWEEN THE SEALED DRAWINGS AND THE ELECTRONIC FILES, THE SEALED DRAWINGS WILL GOVERN.

CHRISTOPHER P. OLSON
LICENSED PROFESSIONAL ENGINEER
NO. 24GE04587900

2 EXECUTIVE DRIVE, SUITE 100
MARLTON, NEW JERSEY 08053
CERTIFICATE OF AUTHORIZATION NO. 24GA28032500

© GANNETT FLEMING, INC. 2022

No.	DESCRIPTION	DATE	BY

REVISIONS

DESIGNED	CADD	SCALE
L.L.K.	M.T.K.	AS NOTED
CHECKED	APPROVED	APPROVED
M.J.M.	-	X.X.X

GANNETT FLEMING

HARRISBURG, PENNSYLVANIA

NORTH JERSEY DISTRICT WATER SUPPLY COMMISSION
WANAQUE, NEW JERSEY

FILTER REHAB

BID SET

GENERAL
FILTER BUILDING FLOOR PLAN

JOB No. 72743

DATE AUGUST 2023

SHEET No. G-2

FILE PATH: C:\Users\mkline\ACCDocs\GANNETT FLEMING INC\072743-NJDWSC_Filter_Rehab\Project Files\Design\ES\WTR\Wkg\72743G2.dwg
DATE SAVED: 7/28/2023 10:47 AM BY: mkline DATE PLOTTED: 7/28/2023 11:33 AM

SHADED FACILITIES

- MASONRY WALL (PLANS AND SECTIONS)
- FILL CONCRETE (USED ON SECTIONS)
- REINFORCED CONCRETE (USED ON SECTIONS)

CHEMICAL FEED SYSTEMS

A	—	ALUM
AC	—	ALTERNATE COAGULANT
AM	—	AMMONIA
CA	—	COAGULANT AID
CD	—	CHLORINE DIOXIDE
CI	—	CORROSION INHIBITOR
CL	—	CHLORINE
CO	—	CARBON DIOXIDE
CP	—	COAGULANT POLYMER
CS	—	CAUSTIC SODA
F	—	FLUORIDE
FA	—	FILTER AID
FC	—	FERRIC CHLORIDE
FS	—	FERRIC SULFATE
HP	—	HYDROGEN PEROXIDE
HW	—	HOT WATER
K	—	POTASSIUM PERMANGANATE
L	—	LIME
O	—	OXYGEN
OZ	—	OZONE
PAC	—	POWDERED ACTIVATED CARBON
PACL	—	POLYALUMINUM CHLORIDE
S	—	SPARE
SA	—	SODA ASH
SB	—	SODIUM BISULFITE
SBP	—	SLUDGE BLANKET POLYMER
SC	—	SODIUM CHLORITE
SCP	—	SLUDGE CONDITIONER POLYMER
SHC	—	SODIUM HYPOCHLORITE
SO	—	SULFUR DIOXIDE
WCP	—	WASTEWATER CONDITIONER POLYMER
'X' D	—	'X' DRAIN
'X' F	—	'X' FILL
'X' V	—	'X' VENT

PROCESS PIPING ABBREVIATIONS

AIR	—	AIR
B	—	BELL
BW	—	BACKWASH WATER
CE	—	CLEARWELL EFFLUENT
CI	—	CLARIFIER INFLUENT
D	—	DRAIN
FE	—	FILTER EFFLUENT
FI	—	FILTER INFLUENT
FLG	—	FLANGE
FR	—	FILTER RINSE
FW	—	FINISHED WATER
GAC	—	GRANULAR ACTIVATED CARBON
MJ	—	MECHANICAL JOINT
MW	—	MIXED WATER
PE	—	PLAIN END
PS	—	PLANT SERVICE
RJ	—	RESTRAINED JOINT
RW	—	RAW WATER
SL	—	SLUDGE
SW	—	SETTLED WATER
V	—	VENT
WW	—	WASTEWATER
W	—	WATER

SAMPLE LINES

CES	—	CLEARWELL EFFLUENT SAMPLE
FIS	—	FILTER INFLUENT SAMPLE
FES	—	FILTER EFFLUENT SAMPLE
FWS	—	FINISHED WATER SAMPLE
MWS	—	MIXED WATER SAMPLE
PES	—	PLANT EFFLUENT SAMPLE
PIS	—	PLANT INFLUENT SAMPLE
RWS	—	RAW WATER SAMPLE

PROCESS FLOW ABBREVIATIONS

CFM	—	CUBIC FEET PER MINUTE
CFS	—	CUBIC FEET PER SECOND
FPS	—	FEET PER SECOND
GPM	—	GALLONS PER MINUTE
MGD	—	MILLION GALLONS PER DAY

GENERAL ABBREVIATIONS

CLR	—	CLEARANCE
℄	—	CENTERLINE
CMU	—	CONCRETE MASONRY UNIT
DIA	—	DIAMETER
EC	—	ELECTRICAL CONTRACT
EL or ELEV	—	ELEVATION
EX	—	EXISTING
FT	—	FOOT OR FEET
GC	—	GENERAL CONTRACT
ID	—	INSIDE DIAMETER
INV	—	INVERT
MAX	—	MAXIMUM
MC	—	MECHANICAL CONTRACT
MIN	—	MINIMUM
NA	—	NOT APPLICABLE
NTS	—	NOT TO SCALE
OD	—	OUTSIDE DIAMETER
PC	—	PLUMBING CONTRACT
ℙ	—	PLATE
SHT	—	SHEET
SQ	—	SQUARE
STA	—	STATION
TYP	—	TYPICAL
W	—	WATER
WW	—	WASTEWATER

MATERIAL

AL	—	ALUMINUM
ACP	—	ASBESTOS CEMENT PIPE
CI	—	CAST IRON
CIP	—	CAST IRON PIPE
CISP	—	CAST IRON SOIL PIPE
CMP	—	CORRUGATED METAL PIPE
CPVC	—	CHLORINATED POLYVINYL CHLORIDE PIPE
CU	—	COPPER
DI	—	DUCTILE IRON
DIP	—	DUCTILE IRON PIPE
FRP	—	FIBERGLASS REINFORCED PLASTIC
GI	—	GALVANIZED IRON
GLDIP	—	GLASS LINED DUCTILE IRON PIPE
HDPE	—	HIGH DENSITY POLYETHYLENE
PCCP	—	PRESTRESSED CONCRETE CYLINDER PIPE
PEX	—	CROSS-LINKED POLYETHYLENE
PVC	—	POLYVINYL CHLORIDE
RCCP	—	REINFORCED CEMENT CONCRETE PIPE
SS	—	STAINLESS STEEL
STL	—	STEEL

PROCESS SHEET REFERENCE LEGEND

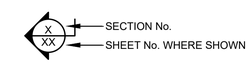

PROCESS INSTRUMENTATION IDENTIFICATION LEGEND

EQUIPMENT TAGGING

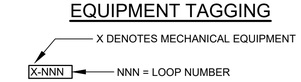

* SEE INSTRUMENTATION DRAWINGS FOR INSTRUMENTATION IDENTIFICATION ABBREVIATIONS.

INSTRUMENT & FUNCTION TAGGING

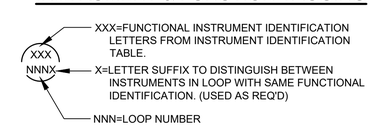

* SEE INSTRUMENTATION DRAWINGS FOR INSTRUMENTATION IDENTIFICATION ABBREVIATIONS.

LINE COMPOSITION

1. NEW FACILITIES SHOWN WITH HEAVIER LINE WORK AND BOLDER TEXT THAN EXISTING FACILITIES.

NOTE:

'X' - INSERT CHEMICAL ABBREVIATION AS REQUIRED.
(EXAMPLE CSV - CAUSTIC SODA VENT)

THIS SHEET IS FOR PROCESS SYMBOLS AND ABBREVIATIONS ONLY. REFER TO ARCHITECTURAL, STRUCTURAL, MECHANICAL AND ELECTRICAL DRAWINGS FOR SYMBOLS AND ABBREVIATIONS FOR THAT WORK.

BID SET

THIS DRAWING IS AND SHALL REMAIN THE PROPERTY OF GANNETT FLEMING, INC. ANY MISUSE, REUSE, ALTERATIONS, ADDITIONS, AND/OR DELETIONS OF THESE DRAWINGS ON PROJECT EXTENSIONS OR OTHER PROJECTS SHALL BE AT THE USER'S SOLE RISK AND WITHOUT LIABILITY TO GANNETT FLEMING, INC. IN THE EVENT THAT A CONFLICT ARISES BETWEEN THE SEALED DRAWINGS AND THE ELECTRONIC FILES, THE SEALED DRAWINGS WILL GOVERN.

CHRISTOPHER P OLSON
LICENSED PROFESSIONAL ENGINEER
NO. 24GE04587900
2 EXECUTIVE DRIVE, SUITE 100
MARLTON, NEW JERSEY 08053
CERTIFICATE OF AUTHORIZATION NO. 24GA28032500

© GANNETT FLEMING, INC. 2022

No.	DESCRIPTION	DATE	BY

REVISIONS

DESIGNED	CADD	SCALE
L.L.K.	M.T.K.	AS NOTED
CHECKED	APPROVED	APPROVED
M.J.M.	-	X.X.X

GANNETT FLEMING
HARRISBURG, PENNSYLVANIA

NORTH JERSEY DISTRICT WATER SUPPLY COMMISSION
WANAQUE, NEW JERSEY

FILTER REHAB

PROCESS
PROCESS LEGEND AND ABBREVIATIONS

JOB No. 72743
DATE AUGUST 2023
SHEET No. P-1

FILE PATH: C:\Users\mkline\ACCDocs\GANNETT FLEMING INC\07743-NJDWSC_Filter_Rehab\Project Files\Design\ES\WTR\Wrkg\72743P1.dwg
DATE SAVED: 7/28/2023 10:39 AM BY: mkline DATE PLOTTED: 7/28/2023 11:34 AM

WALL FITTINGS

DESCRIPTION	SINGLE LINE	THREE LINE
WALL SLEEVE CAULKED (P.E., F. & P.E.)		
WALL SLEEVE MODULAR TYPE SEAL (P.E., F. & P.E.)		
WALL SLEEVE (M.J., F. & M.J.)		
WALL PIPE (F., F. & F.)		
WALL PIPE (B., F. & B.)		
WALL PIPE B., F. & F.)		
WALL PIPE (M.J., F. & F.)		
WALL PIPE (F., F. & P.E.)		

NOTE: APPLIES TO FLOOR SLEEVES ALSO.

PIPE JOINTS

DESCRIPTION	SINGLE LINE	THREE LINE
FLANGE		
MECHANICAL JOINT		
RESTRAINED JOINT	R.	R.
PUSH ON OR BELL AND SPIGOT		
THREADED		
VICTAULIC COUPLING		
WELDED	N.A.	

PIPE FITTINGS (CONT.)

DESCRIPTION	SINGLE LINE	THREE LINE
REDUCER		
ECCENTRIC REDUCER		
BLIND FLANGE		
CLAMPED RESTRAINED COUPLING		
MECHANICAL COUPLING		
RESTRAINED MECH. COUPLING		
FLANGED ADAPTOR	N.A.	
FLANGED ADAPTOR W/ ANCHOR STUDS	N.A.	A.S.

PIPING ACCESSORIES

DESCRIPTION	SINGLE LINE	THREE LINE
VENTURI METER		
STRAINER		
PRESSURE SWITCH	P.S.	P.S.
PRESSURE GAUGE	P.G.	P.G.
PRESSURE GAUGE W/ PRESSURE SWITCH		
THERMOMETER		
PROPELLER OR TURBINE METER		N.A.
MAGNETIC FLOWMETER	M	M

VALVE SYMBOLS

DESCRIPTION	SINGLE LINE	THREE LINE PLAN	THREE LINE ELEVATION
GATE			
BUTTERFLY			
BALL			
BALL CHECK		N.A.	N.A.
CHECK			
DIAPHRAGM		N.A.	N.A.
PLUG			
GLOBE		N.A.	N.A.
PINCH		N.A.	N.A.
NEEDLE		N.A.	N.A.
SOLENOID		N.A.	N.A.
AIR RELEASE	N.A.	1" A.R.	1" A.R.
AIR VACUUM	N.A.	1" A.V.	1" A.V.
COMBINATION AIR RELEASE - AIR/VACUUM	N.A.	1" C.A.V.	1" C.A.V.
KINETIC AIR VACUUM	N.A.	1" K.A.V.	1" K.A.V.
KINETIC COMBINATION AIR RELEASE - AIR VACUUM	N.A.	1" K.C.A.V.	1" K.C.A.V.
PRESSURE REDUCING		N.A.	N.A.
HOSE BIBB			
STOP AND DRAIN			
PRESSURE RELIEF		N.A.	N.A.

PIPE FITTINGS

DESCRIPTION	SINGLE LINE	THREE LINE
CROSS		
CROSS (VERT.)		
TEE		
TEE (VERT. UP)		
TEE (VERT. DOWN)		
90 ELBOW		
90 ELBOW (VERT. DOWN)		
90 ELBOW (VERT. UP)		
90 LONG RADIUS ELBOW	L.R.	L.R.
45 ELBOW		
90 BASE ELBOW		
45^ WYE		
UNION (SCREWED)		N.A.
ADAPTOR		N.A.
HOSE CONNECTION		N.A.

VALVE OPERATOR

DESCRIPTION	SINGLE LINE	THREE LINE
MANUAL OPERATOR	N.A.	
MOTOR OPERATOR	N.A.	BFV 351
CYLINDER OPERATOR	N.A.	C

THIS DRAWING IS AND SHALL REMAIN THE PROPERTY OF GANNETT FLEMING, INC. ANY MISUSE, REUSE, ALTERATIONS, ADDITIONS, AND/OR DELETIONS OF THESE DRAWINGS ON PROJECT EXTENSIONS OR OTHER PROJECTS SHALL BE AT THE USER'S SOLE RISK AND WITHOUT LIABILITY TO GANNETT FLEMING, INC. IN THE EVENT THAT A CONFLICT ARISES BETWEEN THE SEALED DRAWINGS AND THE ELECTRONIC FILES, THE SEALED DRAWINGS WILL GOVERN.

CHRISTOPHER P OLSON
LICENSED PROFESSIONAL ENGINEER
NO. 24GE04587900

2 EXECUTIVE DRIVE, SUITE 100
MARLTON, NEW JERSEY 08053
CERTIFICATE OF AUTHORIZATION NO. 24GA28032500

© GANNETT FLEMING, INC. 2022

FILE PATH: C:\Users\mkline\ACCDocs\GANNETT FLEMING INC\072743-NJDWSC_Filter_Rehab\Project Files\Design\ES\WTR\Wrkg\72743P2.dwg
DATE SAVED: 7/28/2023 10:39 AM BY: mkline DATE PLOTTED: 7/28/2023 11:34 AM

No.	DESCRIPTION	DATE	BY

REVISIONS

DESIGNED	CADD	SCALE
L.L.K.	M.T.K.	AS NOTED
CHECKED	APPROVED	APPROVED
M.J.M.	-	X.X.X

GANNETT FLEMING
HARRISBURG, PENNSYLVANIA

NORTH JERSEY DISTRICT WATER SUPPLY COMMISSION
WANAQUE, NEW JERSEY

FILTER REHAB

BID SET

PROCESS
PROCESS PIPING SYMBOLS

JOB No. 72743
DATE AUGUST 2023
SHEET No. P-2

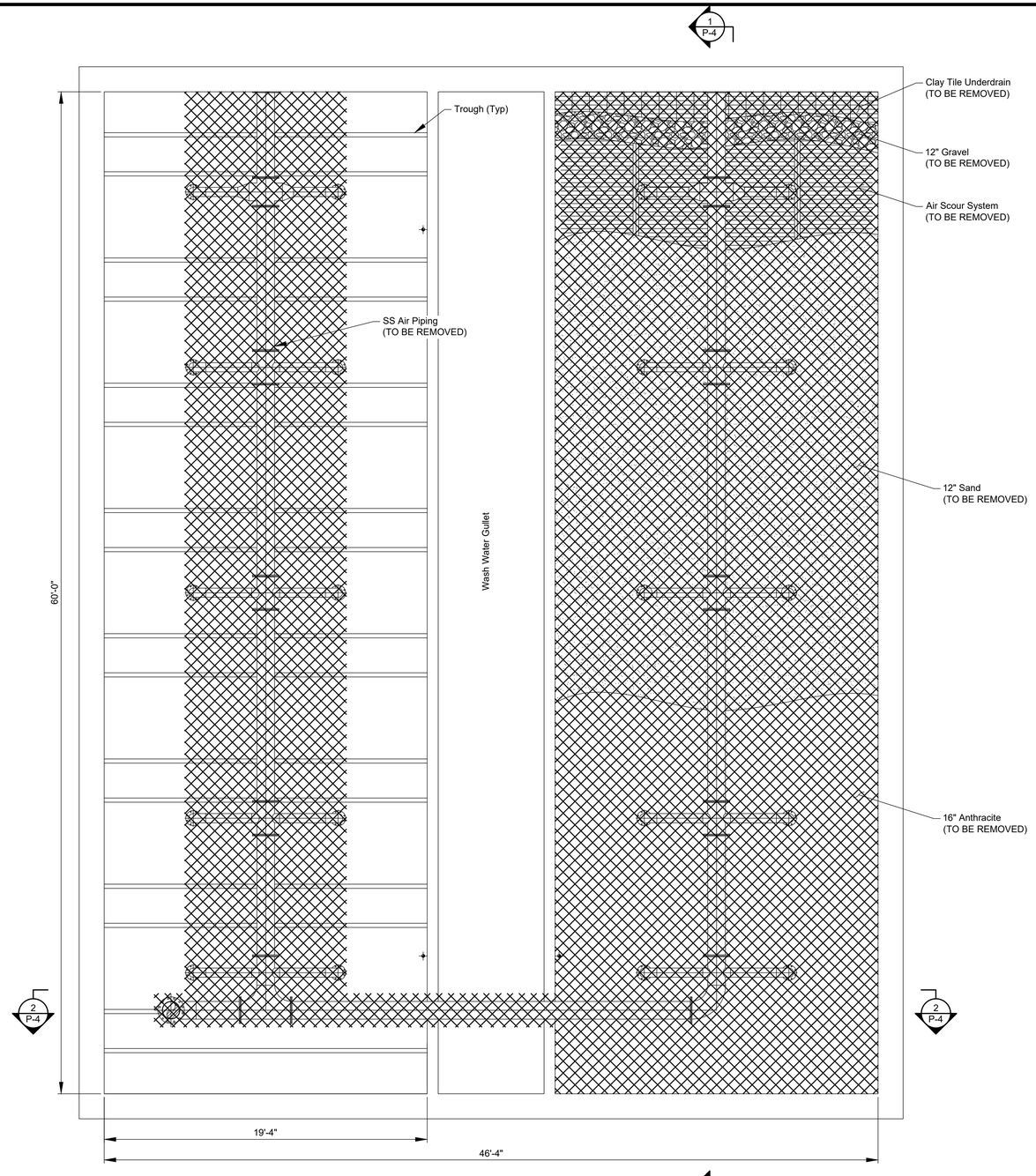

DEMOLITION PLAN

SCALE: 1/4" = 1'-0"

THIS DRAWING IS AND SHALL REMAIN THE PROPERTY OF GANNETT FLEMING, INC. ANY MISUSE, REUSE, ALTERATIONS, ADDITIONS, AND/OR DELETIONS OF THESE DRAWINGS ON PROJECT EXTENSIONS OR OTHER PROJECTS SHALL BE AT THE USER'S SOLE RISK AND WITHOUT LIABILITY TO GANNETT FLEMING, INC. IN THE EVENT THAT A CONFLICT ARISES BETWEEN THE SEALED DRAWINGS AND THE ELECTRONIC FILES, THE SEALED DRAWINGS WILL GOVERN.

CHRISTOPHER P OLSON
LICENSED PROFESSIONAL ENGINEER
NO. 24GE04587900

2 EXECUTIVE DRIVE, SUITE 100
MARLTON, NEW JERSEY 08053
CERTIFICATE OF AUTHORIZATION NO. 24GA28035500

© GANNETT FLEMING, INC. 2022

No.	DESCRIPTION	DATE	BY

REVISIONS

DESIGNED	CADD	SCALE
L.L.K.	M.T.K.	AS NOTED
CHECKED	APPROVED	APPROVED
M.J.M.	-	X.X.X

GANNETT FLEMING

HARRISBURG, PENNSYLVANIA

NORTH JERSEY DISTRICT WATER SUPPLY COMMISSION
WANAQUE, NEW JERSEY

FILTER REHAB

BID SET

FILTERS 1-10
PROCESS
DEMOLITION PLAN

JOB No. 72743

DATE AUGUST 2023

SHEET No. P-3

FILE PATH: C:\Users\mkline\ACCDocs\GANNETT FLEMING INC\072743-NJDWSC_Filter_Rehab\Project Files\Design\ES\WTR\Wkg\72743P3.dwg
DATE SAVED: 7/28/2023 10:39 AM BY: mkline DATE PLOTTED: 7/28/2023 11:34 AM

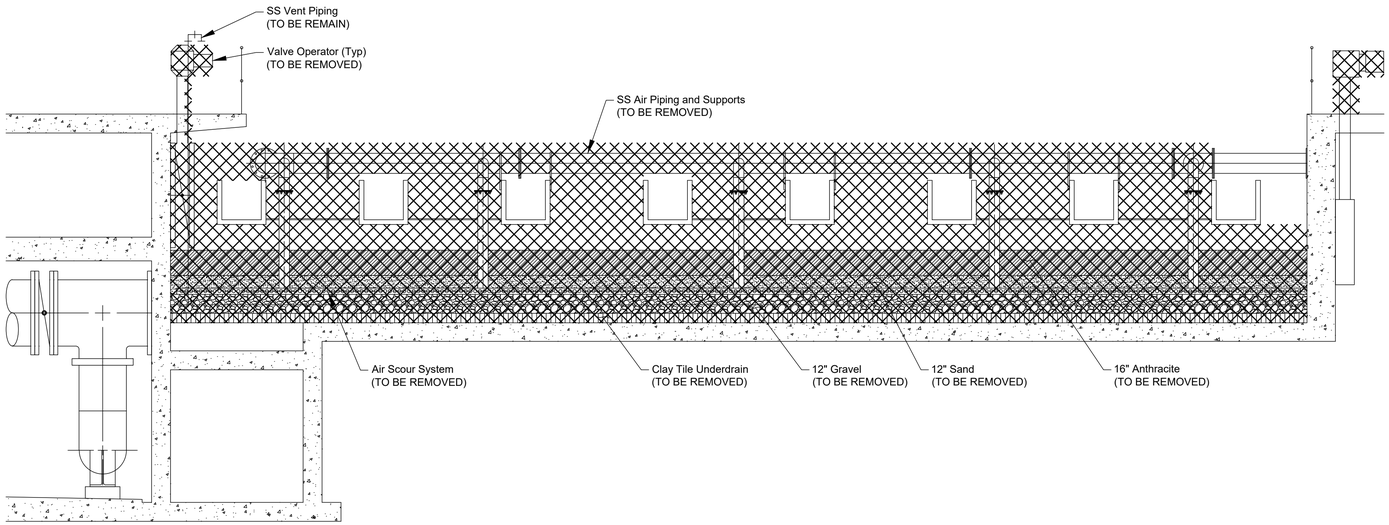

SECTION 1 / P-3
SCALE: 1/4" = 1'-0"

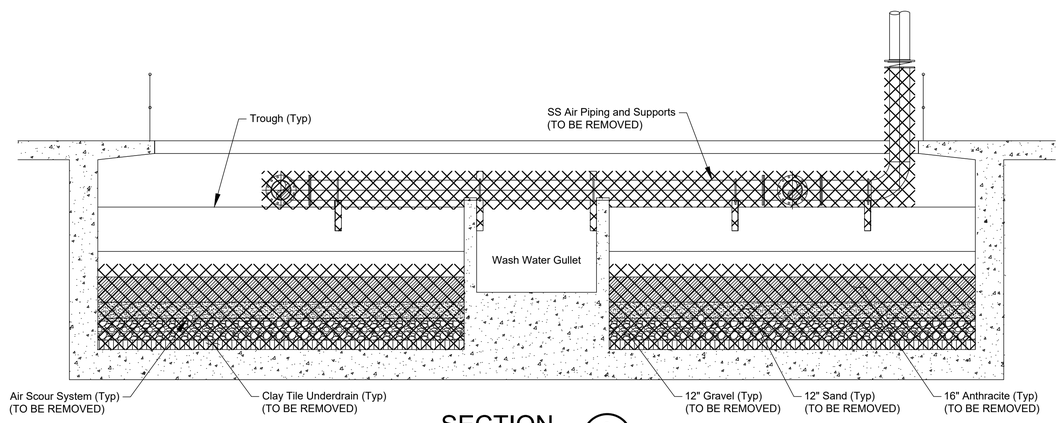

SECTION 2 / P-3
SCALE: 1/4" = 1'-0"

FILE PATH: C:\Users\mkline\ACCDocs\GANNETT FLEMING INC\072743-NJDWSC_Filter_Rehab\Project Files\Design\ES\WTR\Wkg\72743P4.dwg
DATE SAVED: 7/28/2023 10:39 AM BY: mkline DATE PLOTTED: 7/28/2023 11:35 AM

THIS DRAWING IS AND SHALL REMAIN THE PROPERTY OF GANNETT FLEMING, INC. ANY MISUSE, REUSE, ALTERATIONS, ADDITIONS, AND/OR DELETIONS OF THESE DRAWINGS ON PROJECT EXTENSIONS OR OTHER PROJECTS SHALL BE AT THE USER'S SOLE RISK AND WITHOUT LIABILITY TO GANNETT FLEMING, INC. IN THE EVENT THAT A CONFLICT ARISES BETWEEN THE SEALED DRAWINGS AND THE ELECTRONIC FILES, THE SEALED DRAWINGS WILL GOVERN.

CHRISTOPHER P. OLSON
LICENSED PROFESSIONAL ENGINEER
NO. 24GE04587900

2 EXECUTIVE DRIVE, SUITE 100
MARLTON, NEW JERSEY 08053
CERTIFICATE OF AUTHORIZATION NO. 24GA28032500

© GANNETT FLEMING, INC. 2022

No.	DESCRIPTION	DATE	BY

REVISIONS

DESIGNED	CADD	SCALE
L.L.K.	M.T.K.	AS NOTED
CHECKED	APPROVED	APPROVED
M.J.M.	-	X.X.X

GANNETT FLEMING
HARRISBURG, PENNSYLVANIA

NORTH JERSEY DISTRICT WATER SUPPLY COMMISSION
WANAQUE, NEW JERSEY

FILTER REHAB

BID SET

FILTERS 1-10
PROCESS
DEMOLITION SECTIONS

JOB No. 72743
DATE AUGUST 2023

SHEET No. P-4

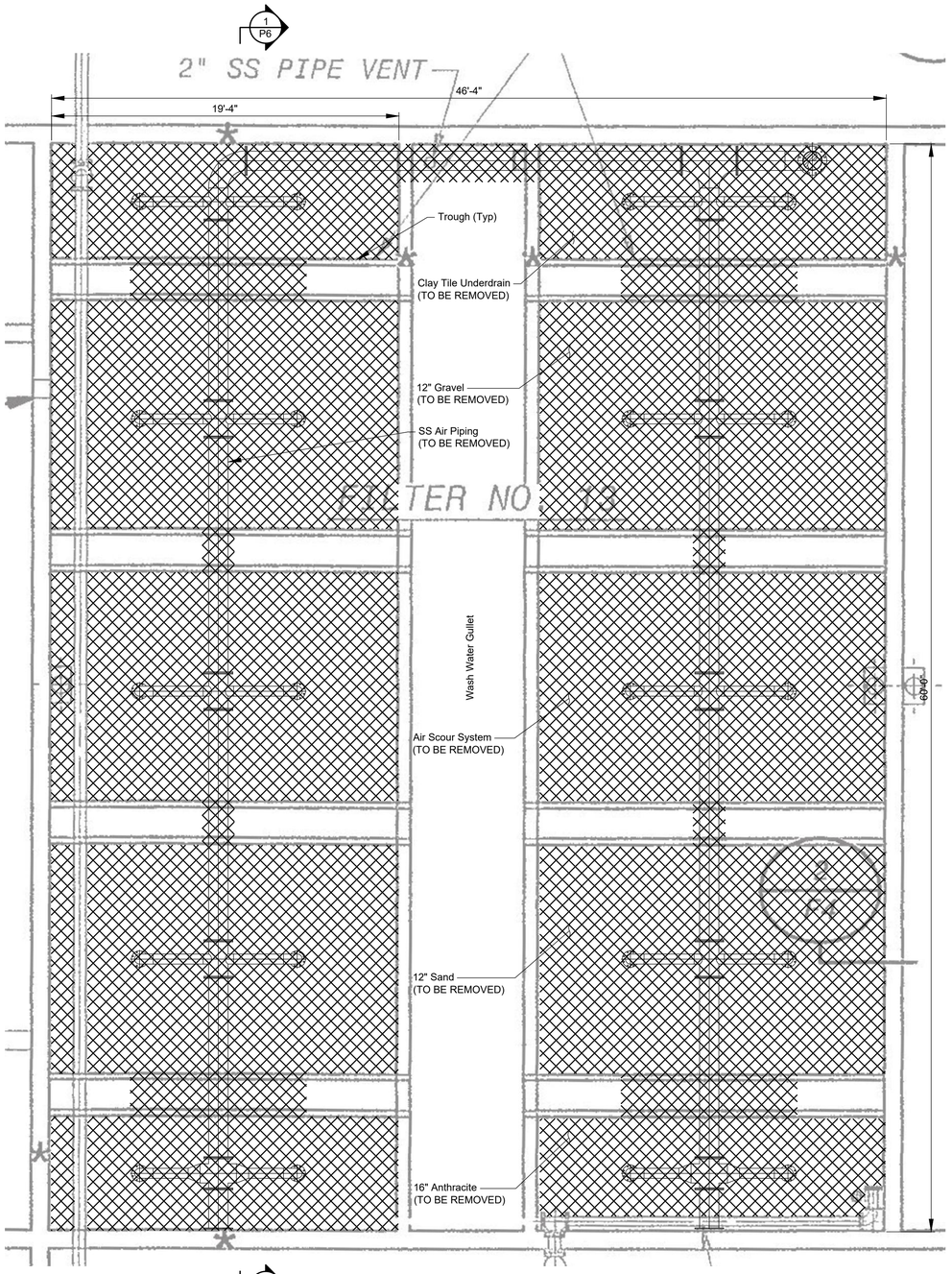

DEMOLITION PLAN

SCALE: 1/4" = 1'-0"

THIS DRAWING IS AND SHALL REMAIN THE PROPERTY OF GANNETT FLEMING, INC. ANY MISUSE, REUSE, ALTERATIONS, ADDITIONS, AND/OR DELETIONS OF THESE DRAWINGS ON PROJECT EXTENSIONS OR OTHER PROJECTS SHALL BE AT THE USER'S SOLE RISK AND WITHOUT LIABILITY TO GANNETT FLEMING, INC. IN THE EVENT THAT A CONFLICT ARISES BETWEEN THE SEALED DRAWINGS AND THE ELECTRONIC FILES, THE SEALED DRAWINGS WILL GOVERN.

CHRISTOPHER P OLSON
LICENSED PROFESSIONAL ENGINEER
NO. 24GE04587900

2 EXECUTIVE DRIVE, SUITE 100
MARLTON, NEW JERSEY 08053
CERTIFICATE OF AUTHORIZATION NO. 24GA28032500

© GANNETT FLEMING, INC. 2022

No.	DESCRIPTION	DATE	BY

REVISIONS

DESIGNED	CADD	SCALE
L.L.K.	M.T.K.	AS NOTED
CHECKED	APPROVED	APPROVED
M.J.M.	-	X.X.X

GANNETT FLEMING

HARRISBURG, PENNSYLVANIA

NORTH JERSEY DISTRICT WATER SUPPLY COMMISSION
WANAQUE, NEW JERSEY

FILTER REHAB

BID SET

FILTERS 11-13
PROCESS
DEMOLITION PLAN

JOB No. 72743

DATE AUGUST 2023

SHEET No. P-5

FILE PATH: C:\Users\mkline\ACCDocs\GANNETT FLEMING INC\072743-NJDWSC_Filter_Rehab\Project Files\Design\ES\WTR\Wkg\72743P5.dwg
DATE SAVED: 7/28/2023 10:39 AM BY: mkline DATE PLOTTED: 7/28/2023 11:35 AM

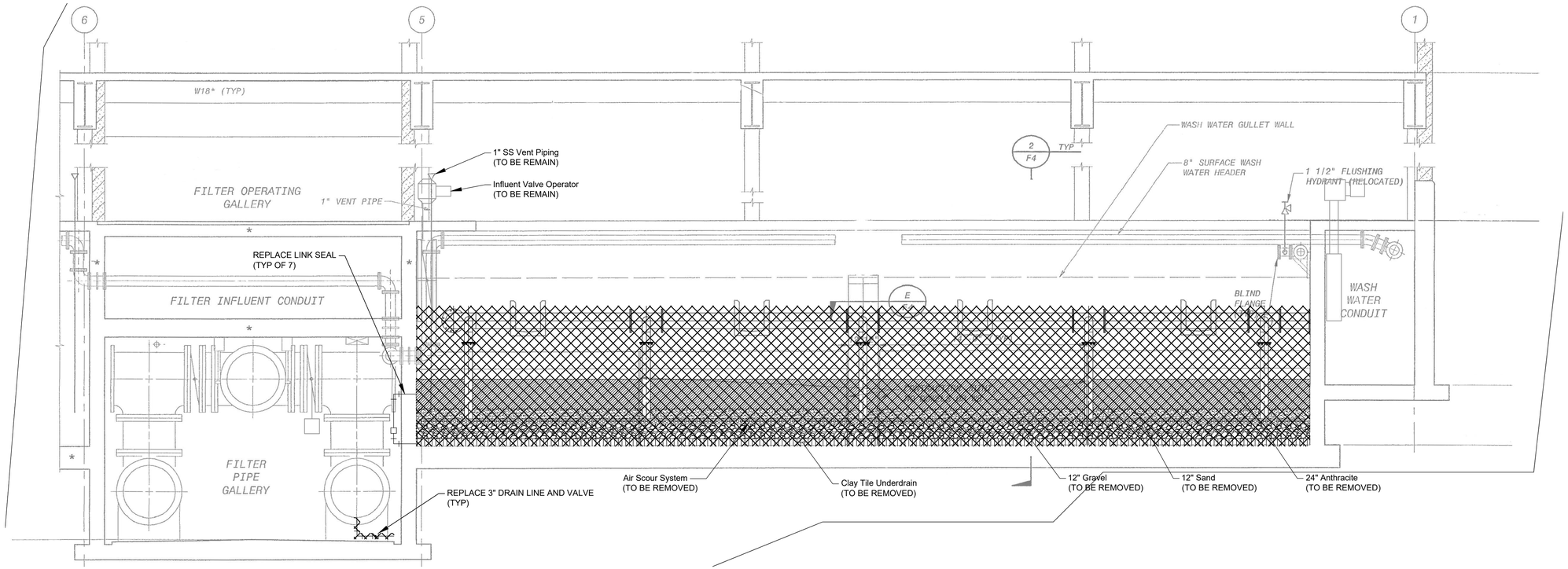

SECTION 1 / P-5

SCALE: 1/4" = 1'-0"

THIS DRAWING IS AND SHALL REMAIN THE PROPERTY OF GANNETT FLEMING, INC. ANY MISUSE, REUSE, ALTERATIONS, ADDITIONS, AND/OR DELETIONS OF THESE DRAWINGS ON PROJECT EXTENSIONS OR OTHER PROJECTS SHALL BE AT THE USER'S SOLE RISK AND WITHOUT LIABILITY TO GANNETT FLEMING, INC. IN THE EVENT THAT A CONFLICT ARISES BETWEEN THE SEALED DRAWINGS AND THE ELECTRONIC FILES, THE SEALED DRAWINGS WILL GOVERN.

CHRISTOPHER P OLSON
LICENSED PROFESSIONAL ENGINEER
NO. 24GE04587900

2 EXECUTIVE DRIVE, SUITE 100
MARLTON, NEW JERSEY 08053
CERTIFICATE OF AUTHORIZATION NO. 24GA28032500

© GANNETT FLEMING, INC. 2022

No.	DESCRIPTION	DATE	BY

REVISIONS

DESIGNED	CADD	SCALE
L.L.K.	M.T.K.	AS NOTED
CHECKED	APPROVED	APPROVED
M.J.M.	-	X.X.X

GANNETT FLEMING

HARRISBURG, PENNSYLVANIA

NORTH JERSEY DISTRICT WATER SUPPLY COMMISSION
WANAQUE, NEW JERSEY

FILTER REHAB

BID SET

FILTERS 11-13
PROCESS
DEMOLITION SECTIONS

JOB No. 72743

DATE AUGUST 2023

SHEET No. P-6

FILE PATH: C:\Users\mkline\ACCDocs\GANNETT FLEMING INC\072743-NJDWSC_Filter_Rehab\Project Files\Design\ES\WTR\Wrkg\72743P6.dwg
DATE SAVED: 7/28/2023 10:39 AM BY: mkline DATE PLOTTED: 7/28/2023 11:36 AM

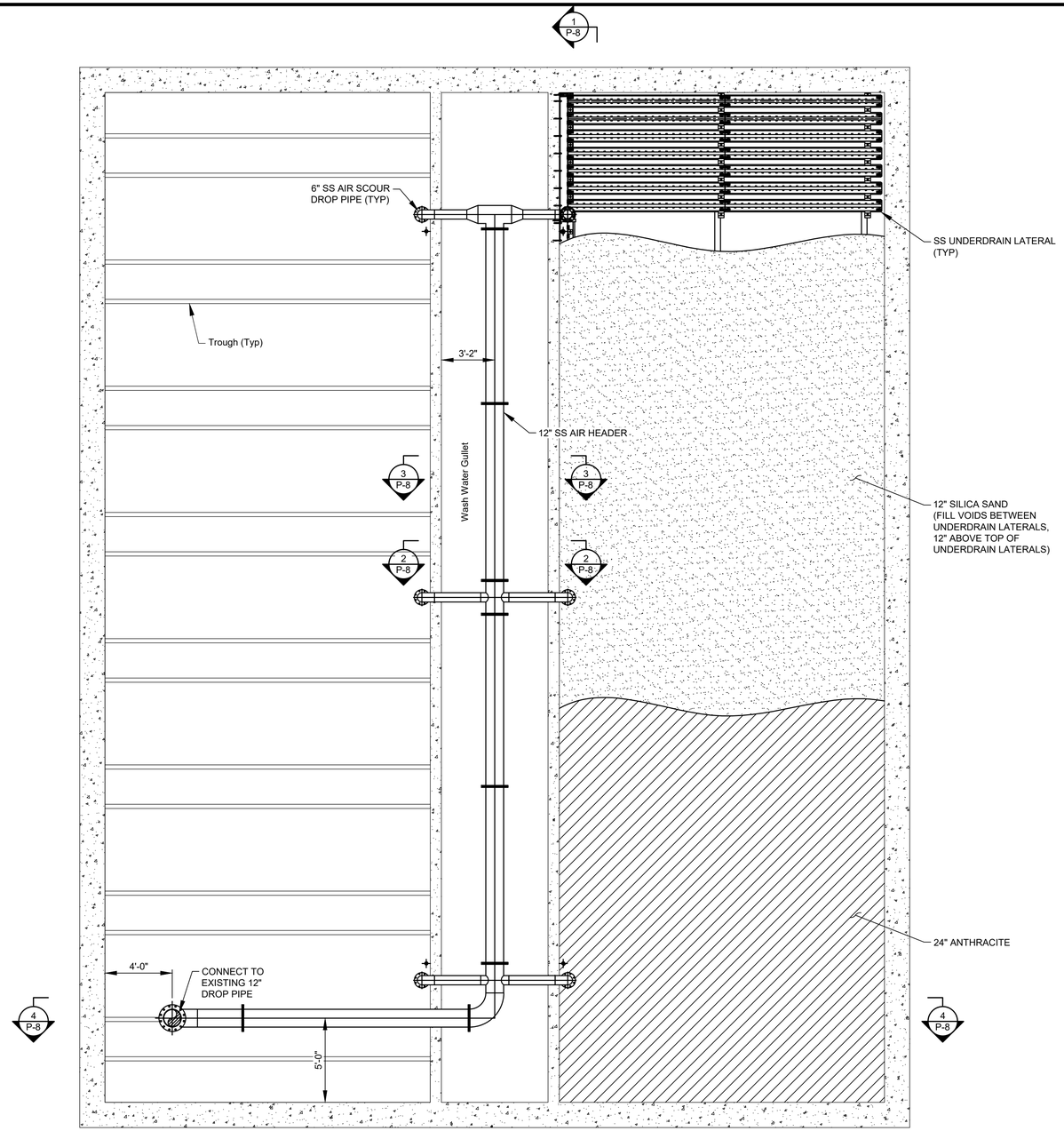

PLAN

SCALE: 1/4" = 1'-0"

THIS DRAWING IS AND SHALL REMAIN THE PROPERTY OF GANNETT FLEMING, INC. ANY MISUSE, REUSE, ALTERATIONS, ADDITIONS, AND/OR DELETIONS OF THESE DRAWINGS ON PROJECT EXTENSIONS OR OTHER PROJECTS SHALL BE AT THE USER'S SOLE RISK AND WITHOUT LIABILITY TO GANNETT FLEMING, INC. IN THE EVENT THAT A CONFLICT ARISES BETWEEN THE SEALED DRAWINGS AND THE ELECTRONIC FILES, THE SEALED DRAWINGS WILL GOVERN.

CHRISTOPHER P OLSON
LICENSED PROFESSIONAL ENGINEER
NO. 24GE04587900

2 EXECUTIVE DRIVE, SUITE 100
MARLTON, NEW JERSEY 08053
CERTIFICATE OF AUTHORIZATION NO. 24GA28032500

© GANNETT FLEMING, INC. 2022

No.	DESCRIPTION	DATE	BY

REVISIONS

DESIGNED	CADD	SCALE
L.L.K.	M.T.K.	AS NOTED
CHECKED	APPROVED	APPROVED
M.J.M.	-	X.X.X

GANNETT FLEMING

HARRISBURG, PENNSYLVANIA

NORTH JERSEY DISTRICT WATER SUPPLY COMMISSION
WANAQUE, NEW JERSEY

FILTER REHAB

BID SET

FILTERS 1-10
PROCESS
PLAN

JOB No. 72743

DATE AUGUST 2023

SHEET No. P-7

FILE PATH: C:\Users\mkline\ACCDocs\GANNETT FLEMING INC\072743-NJDWSC_Filter_Rehab\Project Files\Design\ES\WTR\Wrkg\72743P7.dwg
DATE SAVED: 7/28/2023 10:39 AM BY: mkline DATE PLOTTED: 7/28/2023 11:36 AM

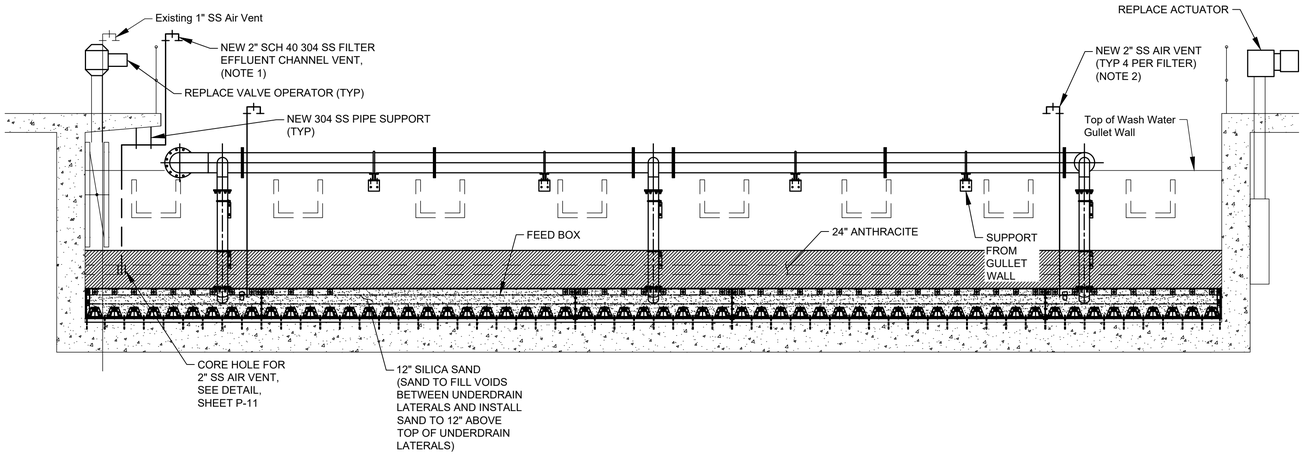

SECTION 1 / P-7
SCALE: 1/4" = 1'-0"

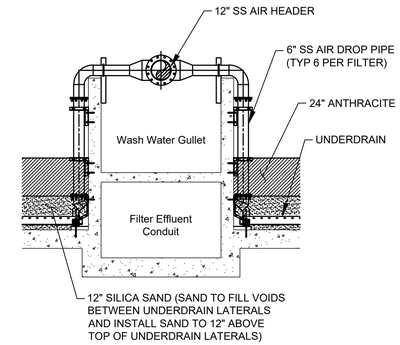

SECTION 2 / P-7
SCALE: 1/4" = 1'-0"

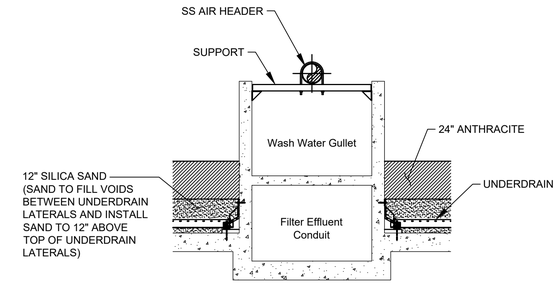

SECTION 3 / P-7
SCALE: 1/4" = 1'-0"

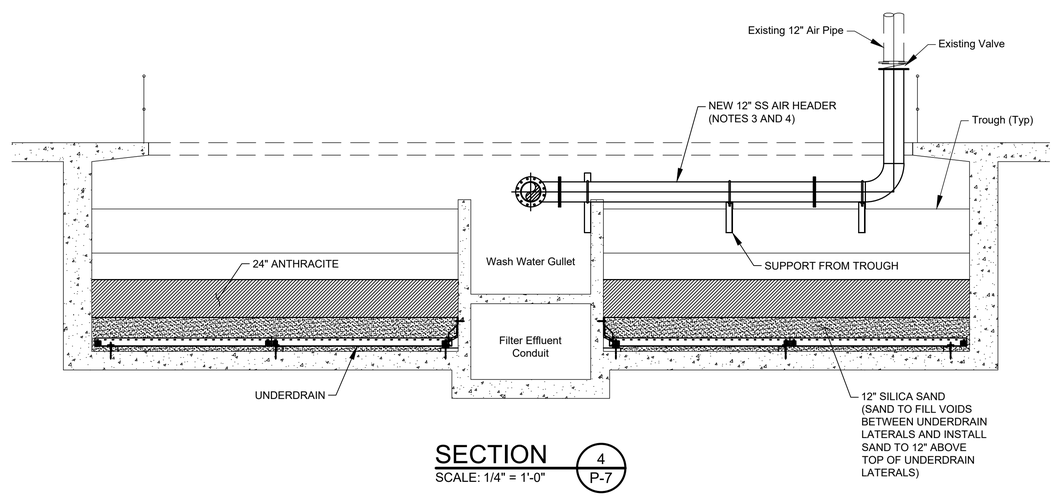

SECTION 4 / P-7
SCALE: 1/4" = 1'-0"

NOTES:

1. ALL NEW UNDERDRAIN VENT PIPES AND FILTERED WATER CONDUIT VENT PIPES TO BE PAINTED WITH TNEMEC N140 OR EQUAL FROM TOP TO 1 FOOT BELOW WATER ELEVATION IN FILTER.
2. INSTALL 2" SS AIR VENT FROM CONNECTIONS IN UNDERDRAIN AIR FEEDBOX. VERTICAL VENT PIPE TO BE 10' LONG WITH TWO 90 DEGREE ELBOWS AND A 6" NIPPLE BETWEEN THE ELBOWS. TYPICAL OF 4 VENTS PER FILTER. PAINT VENT PIPE PER NOTE 1. SCH 40 304 SS PIPE.
3. PAINT DROP PIPE AND 90 DEGREE ELBOW WITH FOREST GREEN TNEMEC N140 OR EQUAL. MUST BE NSF 61 APPROVED PAINT. AIR PIPING WHICH IS BELOW THE NORMAL WATER LEVEL TO REMAIN UNPAINTED. DROP PIPE TO BE PAINTED WITH N69 RAIN FOREST GREEN TO ELEVATION 1'-0" ABOVE FILTER. FROM 1' ABOVE FILTER HORIZONTAL PIPE AND 90 TO BE PAINTED WITH N140 IN WHITE.
4. AIR PIPING IN FILTER TO BE BELOW NORMAL WATER ELEVATION. APPROXIMATELY 2" DEEP NOTCH IN GULLET WALL TO ACCOMMODATE PIPING BELOW SURFACE OF WATER.

THIS DRAWING IS AND SHALL REMAIN THE PROPERTY OF GANNETT FLEMING, INC. ANY MISUSE, REUSE, ALTERATIONS, ADDITIONS, AND/OR DELETIONS OF THESE DRAWINGS ON PROJECT EXTENSIONS OR OTHER PROJECTS SHALL BE AT THE USER'S SOLE RISK AND WITHOUT LIABILITY TO GANNETT FLEMING, INC. IN THE EVENT THAT A CONFLICT ARISES BETWEEN THE SEALED DRAWINGS AND THE ELECTRONIC FILES, THE SEALED DRAWINGS WILL GOVERN.

CHRISTOPHER P. OLSON
LICENSED PROFESSIONAL ENGINEER
NO. 24GE04587900

2 EXECUTIVE DRIVE, SUITE 100
MARLTON, NEW JERSEY 08053
CERTIFICATE OF AUTHORIZATION NO. 24GA28032500

© GANNETT FLEMING, INC. 2022

No.	DESCRIPTION	DATE	BY

REVISIONS

DESIGNED	CADD	SCALE
L.L.K.	M.T.K.	AS NOTED
CHECKED	APPROVED	APPROVED
M.J.M.	-	X.X.X

GANNETT FLEMING
HARRISBURG, PENNSYLVANIA

NORTH JERSEY DISTRICT WATER SUPPLY COMMISSION
WANAQUE, NEW JERSEY

FILTER REHAB

BID SET

FILTERS 1-10
PROCESS
SECTIONS

JOB No. 72743
DATE AUGUST 2023
SHEET No. P-8

FILE PATH: C:\Users\mkline\ACCDocs\GANNETT FLEMING INC\072743-NJDWSC_Filter_Rehab\Project Files\Design\ES\WTR\Wkg\72743P8.dwg
DATE SAVED: 7/28/2023 10:39 AM BY: mkline DATE PLOTTED: 7/28/2023 11:38 AM

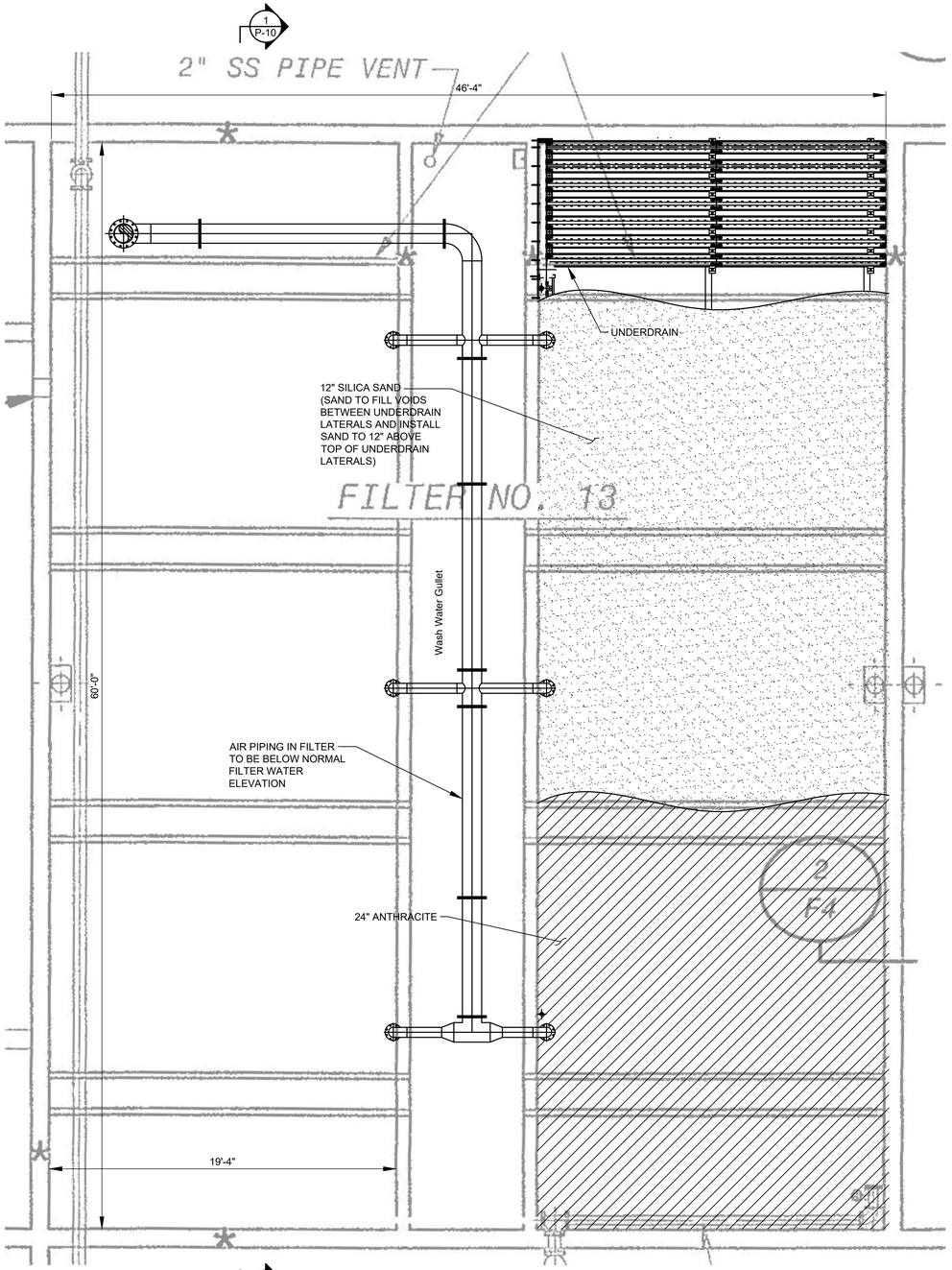

PLAN

SCALE: 1/4" = 1'-0"

THIS DRAWING IS AND SHALL REMAIN THE PROPERTY OF GANNETT FLEMING, INC. ANY MISUSE, REUSE, ALTERATIONS, ADDITIONS, AND/OR DELETIONS OF THESE DRAWINGS ON PROJECT EXTENSIONS OR OTHER PROJECTS SHALL BE AT THE USER'S SOLE RISK AND WITHOUT LIABILITY TO GANNETT FLEMING, INC. IN THE EVENT THAT A CONFLICT ARISES BETWEEN THE SEALED DRAWINGS AND THE ELECTRONIC FILES, THE SEALED DRAWINGS WILL GOVERN.

CHRISTOPHER P. OLSON
LICENSED PROFESSIONAL ENGINEER
NO. 24GE04587900

2 EXECUTIVE DRIVE, SUITE 100
MARLTON, NEW JERSEY 08053
CERTIFICATE OF AUTHORIZATION NO. 24GA28032500

© GANNETT FLEMING, INC. 2022

No.	DESCRIPTION	DATE	BY

REVISIONS

DESIGNED	CADD	SCALE
L.L.K.	M.T.K.	AS NOTED
CHECKED	APPROVED	APPROVED
M.J.M.	-	X.X.X

GANNETT FLEMING

HARRISBURG, PENNSYLVANIA

NORTH JERSEY DISTRICT WATER SUPPLY COMMISSION
WANAQUE, NEW JERSEY

FILTER REHAB

BID SET

FILTERS 11-13
PROCESS
PLAN

JOB No. 72743

DATE AUGUST 2023

SHEET No. P-9

FILE PATH: C:\Users\mkline\ACCDocs\GANNETT FLEMING INC\072743-NJDWSC_Filter_Rehab\Project Files\Design\ES\WTR\Wrkg\72743P9.dwg
DATE SAVED: 7/28/2023 10:39 AM BY: mkline DATE PLOTTED: 7/28/2023 11:38 AM

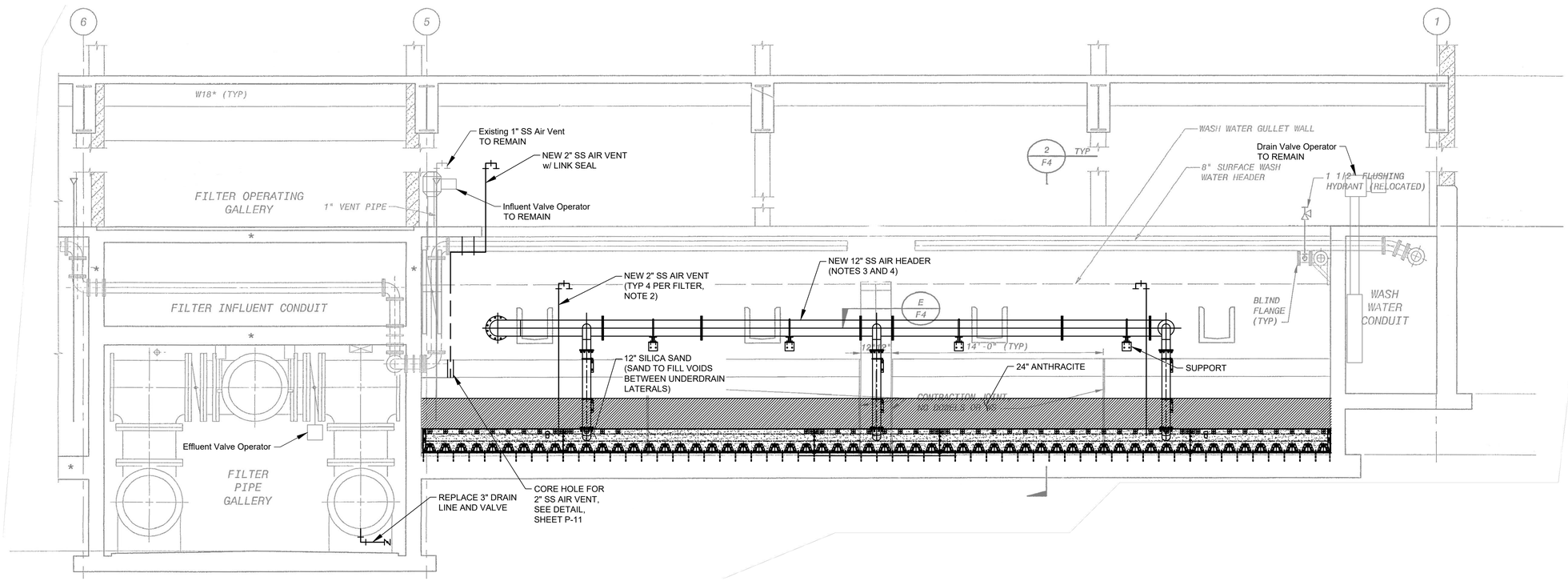

SECTION 1/P-9

SCALE: 1/4" = 1'-0"

NOTES:

1. CONTRACTOR TO FIELD VERIFY ALL EXISTING ELEVATIONS AND DIMENSIONS.
2. ALL NEW UNDERDRAIN VENT PIPES AND FILTERED WATER CONDUIT VENT PIPES TO BE PAINTED WITH TNEMEC N140 OR EQUAL FROM TOP TO 1 FOOT BELOW WATER ELEVATION IN FILTER.
3. INSTALL 2" SS AIR VENT FROM CONNECTIONS IN UNDERDRAIN AIR FEEDBOX. VERTICAL VENT PIPE TO BE 10' LONG WITH TWO 90 DEGREE ELBOWS AND A 6" NIPPLE BETWEEN THE ELBOWS. TYPICAL OF 4 VENTS PER FILTER. PAINT VENT PIPE PER NOTE 1. SCH 40 304 SS PIPE.
4. PAINT DROP PIPE AND 90 DEGREE ELBOW WITH FOREST GREEN TNEMEC N140 OR EQUAL. MUST BE NSF 61 APPROVED PAINT. AIR PIPING WHICH IS BELOW THE NORMAL WATER LEVEL TO REMAIN UNPAINTED. DROP PIPE TO BE PAINTED WITH N69 RAIN FOREST GREEN TO ELEVATION 1'-0" ABOVE FILTER. FROM 1' ABOVE FILTER HORIZONTAL PIPE AND 90 TO BE PAINTED WITH N140 IN WHITE.
5. AIR PIPING IN FILTER TO BE BELOW NORMAL WATER ELEVATION. APPROXIMATELY 2" DEEP NOTCH IN GULLET WALL TO ACCOMMODATE PIPING BELOW SURFACE OF WATER IF REQUIRED.

THIS DRAWING IS AND SHALL REMAIN THE PROPERTY OF GANNETT FLEMING, INC. ANY MISUSE, REUSE, ALTERATIONS, ADDITIONS, AND/OR DELETIONS OF THESE DRAWINGS ON PROJECT EXTENSIONS OR OTHER PROJECTS SHALL BE AT THE USER'S SOLE RISK AND WITHOUT LIABILITY TO GANNETT FLEMING, INC. IN THE EVENT THAT A CONFLICT ARISES BETWEEN THE SEALED DRAWINGS AND THE ELECTRONIC FILES, THE SEALED DRAWINGS WILL GOVERN.

CHRISTOPHER P OLSON
LICENSED PROFESSIONAL ENGINEER
NO. 24GE04587900

2 EXECUTIVE DRIVE, SUITE 100
MARLTON, NEW JERSEY 08053
CERTIFICATE OF AUTHORIZATION NO. 24GA28032500

© GANNETT FLEMING, INC. 2022

No.	DESCRIPTION	DATE	BY

REVISIONS

DESIGNED	CADD	SCALE
L.L.K.	M.T.K.	AS NOTED
CHECKED	APPROVED	APPROVED
M.J.M.	-	X.X.X

GANNETT FLEMING

HARRISBURG, PENNSYLVANIA

NORTH JERSEY DISTRICT WATER SUPPLY COMMISSION
WANAQUE, NEW JERSEY

FILTER REHAB

BID SET

FILTERS 11-13
PROCESS
SECTION

JOB No. 72743

DATE AUGUST 2023

SHEET No. P-10

FILE PATH: C:\Users\mkline\ACCDocs\GANNETT FLEMING INC\072743-NJDWSC_Filter_Rehab\Project Files\Design\ES\WTR\Wrkg\72743P10.dwg
DATE SAVED: 7/28/2023 10:39 AM BY: mkline DATE PLOTTED: 7/28/2023 11:39 AM

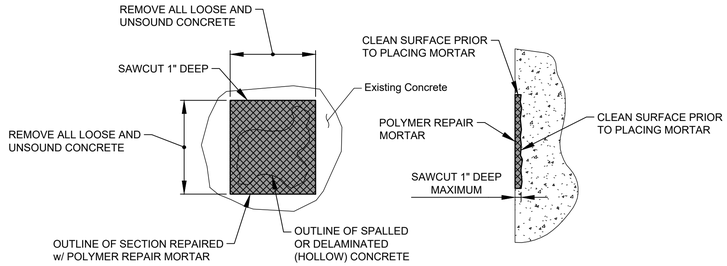

VIEW SECTION

TYPE 1 REPAIR - CONCRETE SPALL

NO SCALE

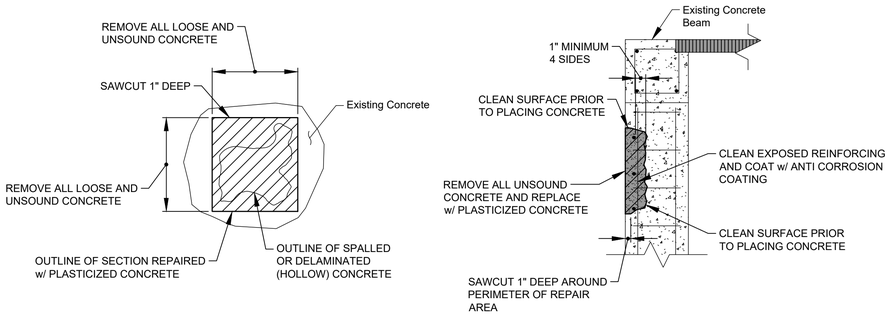

VIEW SECTION

TYPE 2 REPAIR - CONCRETE SPALL

NO SCALE

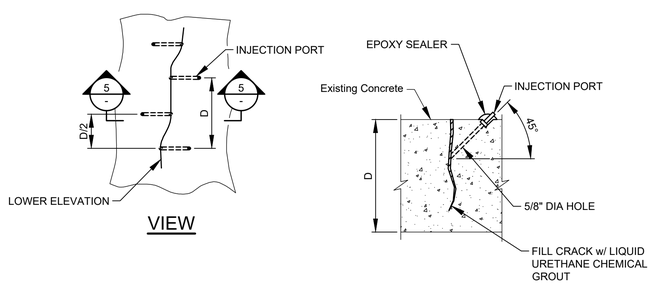

VIEW

SECTION 5-5

TYPE 3 REPAIR - CONCRETE CRACK

NO SCALE

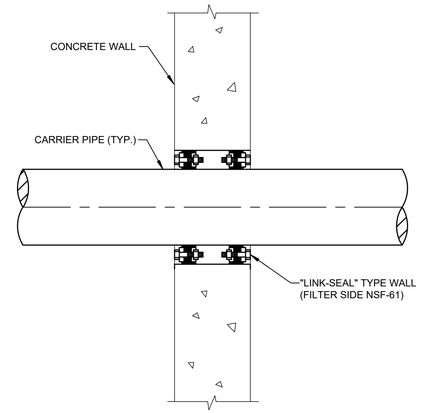

NOTE:

1. FLOOR PENETRATION SEAL SIMILAR.
2. THE 2-INCH VENT PIPE IS THE ONLY PIPE PENETRATION THAT DOES NOT REQUIRE TWO (2) LINK SEALS SINCE THERE IS NO ACCESS TO THE OTHER SIDE.

WALL/SLAB PENETRATION DETAIL

NO SCALE

THIS DRAWING IS AND SHALL REMAIN THE PROPERTY OF GANNETT FLEMING, INC. ANY MISUSE, REUSE, ALTERATIONS, ADDITIONS, AND/OR DELETIONS OF THESE DRAWINGS ON PROJECT EXTENSIONS OR OTHER PROJECTS SHALL BE AT THE USER'S SOLE RISK AND WITHOUT LIABILITY TO GANNETT FLEMING, INC. IN THE EVENT THAT A CONFLICT ARISES BETWEEN THE SEALED DRAWINGS AND THE ELECTRONIC FILES, THE SEALED DRAWINGS WILL GOVERN.

CHRISTOPHER P OLSON
LICENSED PROFESSIONAL ENGINEER
NO. 24GE04587900

2 EXECUTIVE DRIVE, SUITE 100
MARLTON, NEW JERSEY 08053
CERTIFICATE OF AUTHORIZATION NO. 24GA28032500

© GANNETT FLEMING, INC. 2022

No.	DESCRIPTION	DATE	BY

REVISIONS

DESIGNED	CADD	SCALE
L.L.K.	M.T.K.	AS NOTED
CHECKED	APPROVED	APPROVED
M.J.M.	-	X.X.X

GANNETT FLEMING

HARRISBURG, PENNSYLVANIA

NORTH JERSEY DISTRICT WATER SUPPLY COMMISSION
WANAQUE, NEW JERSEY

FILTER REHAB

BID SET

PROCESS
MISCELLANEOUS DETAILS

JOB No. 72743

DATE AUGUST 2023

SHEET No. P-11

FILE PATH: C:\Users\mkline\ACCDocs\GANNETT FLEMING INC\072743-NJDWSC_Filter_Rehab\Project Files\Design\ES\WTR\Wkg\72743P11.dwg
DATE SAVED: 7/28/2023 10:39 AM BY: mkline DATE PLOTTED: 7/28/2023 11:39 AM

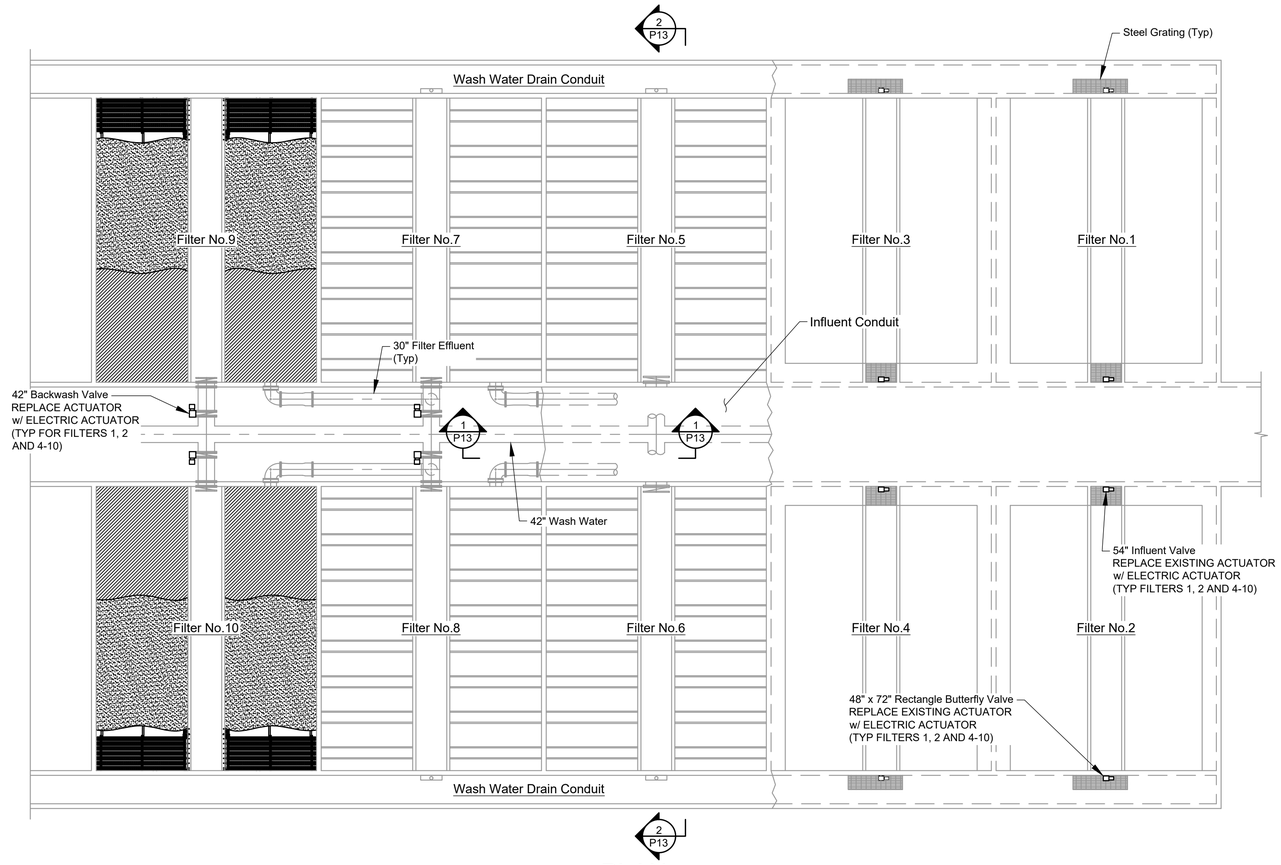

PLAN

SCALE: 1/16" = 1'-0"

FILE PATH: C:\Users\mkline\ACCDocs\GANNETT FLEMING INC\072743-NJDWSC_Filter_Rehab\Project Files\Design\ES\WTR\Wkg\72743P12.dwg
DATE SAVED: 7/28/2023 10:39 AM BY: mkline DATE PLOTTED: 7/28/2023 11:40 AM

THIS DRAWING IS AND SHALL REMAIN THE PROPERTY OF GANNETT FLEMING, INC. ANY MISUSE, REUSE, ALTERATIONS, ADDITIONS, AND/OR DELETIONS OF THESE DRAWINGS ON PROJECT EXTENSIONS OR OTHER PROJECTS SHALL BE AT THE USER'S SOLE RISK AND WITHOUT LIABILITY TO GANNETT FLEMING, INC. IN THE EVENT THAT A CONFLICT ARISES BETWEEN THE SEALED DRAWINGS AND THE ELECTRONIC FILES, THE SEALED DRAWINGS WILL GOVERN.

CHRISTOPHER P. OLSON
LICENSED PROFESSIONAL ENGINEER
NO. 24GE04587900

2 EXECUTIVE DRIVE, SUITE 100
MARLTON, NEW JERSEY 08053
CERTIFICATE OF AUTHORIZATION NO. 24GA28032500

© GANNETT FLEMING, INC. 2022

No.	DESCRIPTION	DATE	BY

REVISIONS

DESIGNED	CADD	SCALE
L.L.K.	M.T.K.	AS NOTED
CHECKED	APPROVED	APPROVED
M.J.M.	-	X.X.X

GANNETT FLEMING

HARRISBURG, PENNSYLVANIA

NORTH JERSEY DISTRICT WATER SUPPLY COMMISSION
WANAQUE, NEW JERSEY

FILTER REHAB

BID SET

PROCESS
PLAN

JOB No. 72743

DATE AUGUST 2023

SHEET No. P-12

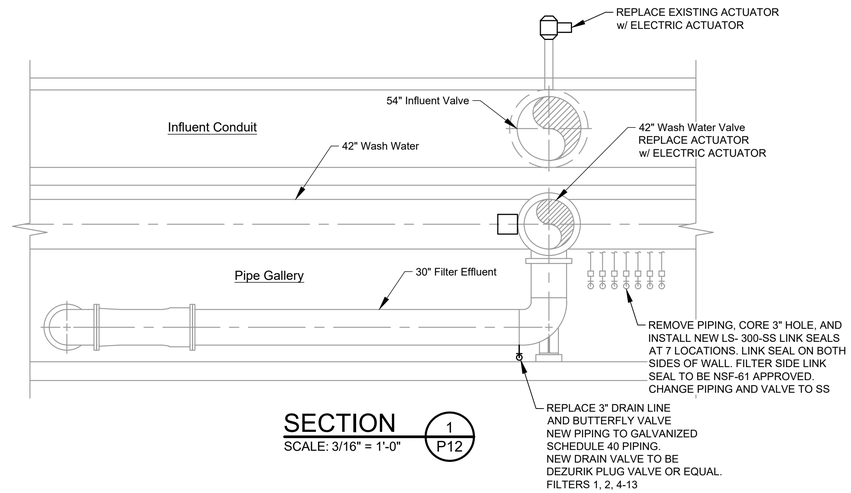

SECTION 1 / P12
SCALE: 3/16" = 1'-0"

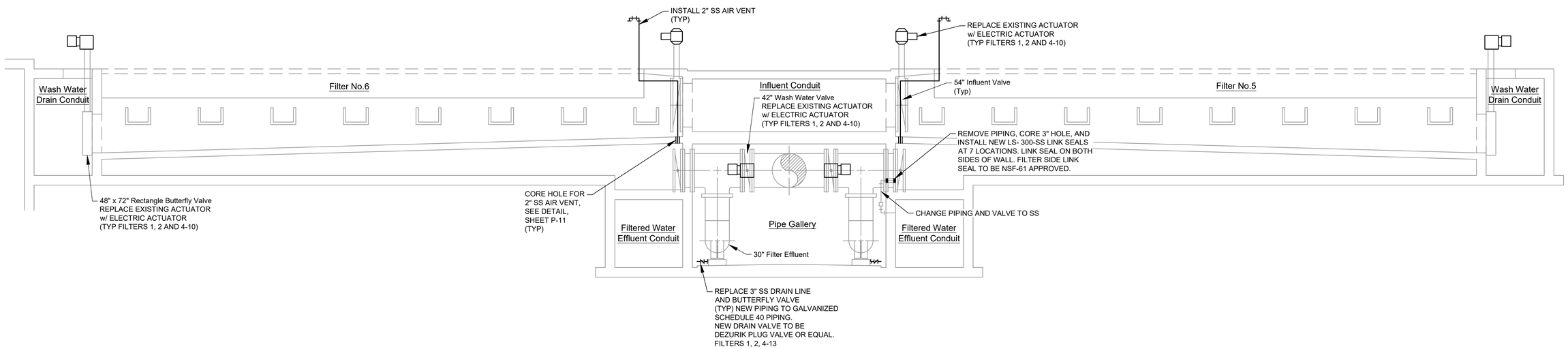

SECTION 2 / P12
SCALE: 3/16" = 1'-0"

THIS DRAWING IS AND SHALL REMAIN THE PROPERTY OF GANNETT FLEMING, INC. ANY MISUSE, REUSE, ALTERATIONS, ADDITIONS, AND/OR DELETIONS OF THESE DRAWINGS ON PROJECT EXTENSIONS OR OTHER PROJECTS SHALL BE AT THE USER'S SOLE RISK AND WITHOUT LIABILITY TO GANNETT FLEMING, INC. IN THE EVENT THAT A CONFLICT ARISES BETWEEN THE SEALED DRAWINGS AND THE ELECTRONIC FILES, THE SEALED DRAWINGS WILL GOVERN.

CHRISTOPHER P OLSON
LICENSED PROFESSIONAL ENGINEER
NO. 24GE04587900

2 EXECUTIVE DRIVE, SUITE 100
MARLTON, NEW JERSEY 08053
CERTIFICATE OF AUTHORIZATION NO. 24GA28032500

© GANNETT FLEMING, INC. 2022

No.	DESCRIPTION	DATE	BY

REVISIONS

DESIGNED	CADD	SCALE
L.L.K.	M.T.K.	AS NOTED
CHECKED	APPROVED	APPROVED
M.J.M.	-	X.X.X

GANNETT FLEMING
HARRISBURG, PENNSYLVANIA

NORTH JERSEY DISTRICT WATER SUPPLY COMMISSION
WANAQUE, NEW JERSEY

FILTER REHAB

BID SET

PROCESS
SECTIONS

JOB No. 72743
DATE AUGUST 2023

SHEET No. P-13

FILE PATH: C:\Users\mkline\ACCDocs\GANNETT FLEMING INC\072743-NJDWSC_Filter_Rehab\Project Files\Design\ESI\WTR\Wkg\72743P13.dwg
DATE SAVED: 7/28/2023 10:39 AM BY: mkline DATE PLOTTED: 7/28/2023 11:33 AM

GENERAL POWER:

- C — DENOTES MOUNTED 6" ABOVE COUNTER TOP
- SINGLE RECEPTACLE
- GFI — DENOTES SPECIFIC DEVICE REQUIREMENTS-SEE
- WP — ABBREVIATIONS
- DUPLEX RECEPTACLE, 20 AMP RATED
- QUADRUPLEX RECEPTACLE
- DUPLEX RECEPTACLE DEDICATED FOR EMERGENCY/STANDBY POWER
- SPECIAL PURPOSE RECEPTACLE (AMPACITY AS NOTED)
- DUPLEX RECEPTACLE FLOOR MOUNTED
- SPECIAL PURPOSE RECEPTACLE FLOOR MOUNTED (AMPACITY AS NOTED)
- PLUGMOLD DEVICE; LENGTH AND QUANTITY OF RECEPTACLES AS NOTED
- J — JUNCTION BOX
- NON FUSED DISCONNECT SWITCH
- F — FUSED DISCONNECT SWITCH
- CB — ENCLOSED CIRCUIT BREAKER
- MOTOR STARTER
- COMBINATION MOTOR STARTER
- CONTACTOR
- TS — TIME CLOCK SWITCH CONTROL
- S_T — TIME SWITCH
- S_M — MANUAL MOTOR STARTER SWITCH WITHOUT OVERLOADS
- S_{MT} — MANUAL MOTOR STARTER SWITCH WITH THERMAL OVERLOADS
- S_{MP} — MANUAL MOTOR STARTER SWITCH WITHOUT OVERLOADS WITH PILOT LIGHT
- P B — PUSHBUTTON STATION, TYPE AS NOTED
- S S — SELECTOR SWITCH, TYPE AS NOTED
- MUSHROOM SWITCH
- MOTOR (HORSEPOWER INDICATED ON PLANS)
- T — TRANSFORMER
- GENERATOR
- MOD — MOTOR OPERATED DAMPER
- T — THERMOSTAT
- UPS — UNINTERRUPTIBLE POWER SUPPLY
- SPD — SURGE PROTECTIVE DEVICE
- UNIT HEATER
- PANELBOARD

COMMUNICATIONS:

- X/Y — TELECOM OUTLET
  - X - INDICATES NUMBER OF VOICE JACKS
  - Y - INDICATES NUMBER OF CAT 6 JACKS
- CATV — CABLE TELEVISION COAX OUTLET

CONDUIT FEEDERS & BRANCH CIRCUITS:

- CONDUIT FEEDERS (TYP)
- JUNCTION BOX INDICATION; ON POWER AND LIGHTING JUNCTION BOX SIZED IN ACCORDANCE WITH NATIONAL ELECTRICAL CODE
- CONDUIT - EXPOSED
- CONDUIT - CONCEALED IN WALL OR CEILING
- CONDUIT TURNED
- CONDUIT TURNED UP
- CONDUIT TURNED DOWN
- CONDUIT CAPPED
- 10 — CONDUIT FEEDER IDENTIFICATION (SEE FEEDER LEGEND ON DRAWING)

MISCELLANEOUS:

- KEYNOTE OR EQUIPMENT IDENTIFICATION
- 1 / E1 — SECTION IDENTIFICATION; SECTION NOMENCLATURE; SHEET NUMBER ON WHICH SECTION IS SHOWN
- 1 / E1 — DETAIL IDENTIFICATION; DETAIL NOMENCLATURE; SHEET NUMBER ON WHICH DETAIL IS SHOWN
- C — COMMUNICATION
- E — ELECTRIC
- E — ELECTRIC SERVICE / DUCTBANK-UNDERGROUND
- T — TELEPHONE
- OHE — OVERHEAD ELECTRIC
- OHT — OVERHEAD TELEPHONE
- G — GROUNDING
- UTILITY POLE
- HH-x — HANDHOLE
- MH-x — MANHOLE
- X — SPACE TYPE TAG, REFER TO AREA SCHEDULE FOR CORRESPONDING MATERIAL REQUIREMENTS FOR CONDUITS, BOXES, ETC.

LINETYPE LEGEND:

- NEW EQUIPMENT / WORK
- EXISTING EQUIPMENT / WORK OR WORK BY OTHERS
- DEMOLITION

ONE-LINE:

- AF — LOW VOLTAGE DRAWOUT CIRCUIT BREAKER
- AT — AMP FRAME
- EO — AMP TRIP
- LISG — ELECTRICALLY OPERATED
  - TRIP ELEMENTS
    - L- LONG TIME
    - S- SHORT TIME
    - I- INSTANTANEOUS
    - G GROUND FAULT
- LOW VOLTAGE CIRCUIT BREAKER
- TRANSFORMER
- N A / E L — TRANSFER SWITCH
- DISCONNECT SWITCH
- FUSED DISCONNECT SWITCH
- STARTER
- COMBO DISCONNECT/STARTER
- 3 — MOTOR

ABBREVIATIONS:

A or AMP	AMPERE
AB.	ABOVE
AC	ALTERNATING CURRENT
AFF	ABOVE FINISHED FLOOR
AFG	ABOVE FINISHED GRADE
AIC	AMPERE INTERRUPTING CAPACITY
AS	AMMETER SELECTOR SWITCH
ATS	AUTO TRANSFER SWITCH
AUTO	AUTOMATIC
AWG	AMERICAN WIRE GAUGE
BLDG	BUILDING
C	CONDUIT
CP	CONTROL PANEL
CPT	CONTROL POWER TRANSFORMER
CT	CURRENT TRANSFORMER
CU	COPPER
DISC	DISCONNECT
DIV	DIVISION
DS	DISCONNECT SWITCH
DWG	DRAWING
(E)	EXISTING
EC	ELECTRICAL CONTRACTOR
ECH	ELECTRIC UNIT HEATER
EMT	ELECTRICAL METALLIC TUBING (CONDUIT)
EF	EXHAUST FAN
EP	EXPLOSION PROOF
ETR	EXISTING-TO-REMAIN
EUH	ELECTRIC UNIT HEATER
FAAP	FIRE ALARM ANNUNCIATOR PANEL
FACP	FIRE ALARM CONTROL PANEL
F/T	FEED THROUGH
FU	FUSE
FRE	FIBERGLASS REINFORCED EPOXY
GFI	GROUND FAULT INTERRUPTER
GRD	GROUND
HID	HIGH INTENSITY DISCHARGE
HP	HORSEPOWER
HPS	HIGH PRESSURE SODIUM
HVAC	HEAT-VENT-AIR CONDITIONING
IG	ISOLATED GROUND
IND	INDUSTRIAL
JIC	JOINT INDUSTRIAL COUNCIL
KV	KILOVOLT
KVA	KILOVOLT AMPERE
KW	KILOWATT
LA	LIGHTNING ARRESTOR
LC	LIGHTING CONTACTOR
LTG	LIGHTING
MC	MECHANICAL HVAC CONTRACTOR
MCB	MAIN CIRCUIT BREAKER
MCC	MOTOR CONTROL CENTER
MCP	MOTOR CIRCUIT PROTECTOR
MFR	MANUFACTURER
MLO	MAIN LUG ONLY
MOA	MULTI-OUTLET ASSEMBLY
MOD	MOTOR OPERATED DAMPER
MOV	MOTOR OPERATED VALVE
MS	MOTOR STARTER
MTD	MOUNTED
MTG	MOUNTING
MV	MEDIUM VOLTAGE
N/A	NOT APPLICABLE
NC	NORMALLY CLOSED
NO	NORMALLY OPEN
NIC	NOT IN SCOPE
No. or #	NUMBER
PMT	PAD MOUNTED TRANSFORMER
PNL	PANEL
PT	POTENTIAL TRANSFORMER
PVC	POLYVINYL CHLORIDE (CONDUIT)
(R)	REMOVE
RECEPT	RECEPTACLE
RGS	RIGID GALVANIZED STEEL (CONDUIT)
RVAT	REDUCED VOLTAGE AUTOTRANSFORMER
RVSS	REDUCED VOLTAGE SOLID STATE
SC	SURGE CAPACITOR
SPD	SURGE PROTECTIVE DEVICE
SW	SWITCH
SWBD	SWITCHBOARD
TC	CABLE TRAY-CABLE
TM	THERMAL MAGNETIC
TTB	TELEPHONE TERMINAL BOARD
TTC	TELEPHONE TERMINAL CABINET
TYP	TYPICAL
UL	UNDERWRITER LABORATORIES
UH	UNIT HEATER
UON	UNLESS OTHERWISE NOTED
UPS	UNINTERRUPTIBLE POWER SUPPLY
V	VOLT
VFD	VARIABLE FREQUENCY DRIVE
VS	VOLTMETER SELECTOR SWITCH
W	WIRE
W/	WITH
WP	WEATHERPROOF (WHILE IN USE)
WR	WEATHER RESISTANT
XFMR	TRANSFORMER
1-PH	SINGLE PHASE
3-PH	THREE PHASE

THIS DRAWING REFLECTS A GANNETT FLEMING STANDARD SYMBOL AND ABBREVIATIONS DRAWING. SYMBOLS AND ABBREVIATIONS ON THIS DRAWING MAY OR MAY NOT REFLECT EVERY CONDITION OF THIS PROJECT.

THIS DRAWING IS AND SHALL REMAIN THE PROPERTY OF GANNETT FLEMING, INC. ANY MISUSE, REUSE, ALTERATIONS, ADDITIONS, AND/OR DELETIONS OF THESE DRAWINGS ON PROJECT EXTENSIONS OR OTHER PROJECTS SHALL BE AT THE USER'S SOLE RISK AND WITHOUT LIABILITY TO GANNETT FLEMING, INC. IN THE EVENT THAT A CONFLICT ARISES BETWEEN THE SEALED DRAWINGS AND THE ELECTRONIC FILES, THE SEALED DRAWINGS WILL GOVERN.

CHARLES J. GREW
LICENSED PROFESSIONAL ENGINEER
NO. 24GE05275300
2 EXECUTIVE DRIVE, SUITE 100
MARLTON, NEW JERSEY 08053
CERTIFICATE OF AUTHORIZATION NO. 24GA28032500

© GANNETT FLEMING, INC. 2022

No.	DESCRIPTION	DATE	BY

REVISIONS

DESIGNED	CADD	SCALE
RH	OM	AS NOTED
CHECKED	APPROVED	APPROVED
BAS	BAS	X.X.X

GANNETT FLEMING
HARRISBURG, PENNSYLVANIA

NORTH JERSEY DISTRICT WATER SUPPLY COMMISSION
WANAQUE, NEW JERSEY

FILTER REHAB

BID SET

ELECTRICAL
SYMBOLS AND ABBREVIATIONS

JOB No. 72743
DATE AUGUST 2023
SHEET No. E-01

FILE PATH: C:\Users\csmith\ACCDocs\GANNETT FLEMING INC\072743-NJDWSC_Filter_Rehab\Project Files\Design\FAC\ELEC\Wrkg\72743 E01.dwg
DATE SAVED: 7/28/2023 11:22 AM BY: csmith DATE PLOTTED: 7/28/2023 12:10 PM

GENERAL ELECTRICAL NOTES:

1. DRAWINGS ARE DIAGRAMMATIC IN NATURE, CONTRACTOR SHALL VERIFY DIMENSIONS PRIOR TO INSTALLATION. CONTRACTOR SHALL COORDINATE ALL WORK WITH OTHER DIVISION TRADES TO PROVIDE A COMPLETE AND OPERABLE SYSTEM. CONTRACTOR SHALL COORDINATE LOCATION OF FIXTURES, DEVICES, ETC. WITH OTHER TRADES IN ORDER TO AVOID INTERFERENCES.

2. ARCHITECTURAL FEATURES SHOWN ON THESE DRAWINGS ARE FOR BACKGROUND INFORMATION ONLY. REFER TO ARCHITECTURAL AND STRUCTURAL DRAWINGS FOR ACTUAL BUILDING CONSTRUCTION OF WALL AND CURBS. REFER TO EQUIPMENT DRAWINGS FOR ACTUAL LOCATION OF EQUIPMENT.

3. ALL WORK SHALL BE PERFORMED AS REQUIRED BY APPLICABLE SECTION OF THE NATIONAL ELECTRICAL CODE, 2020 EDITION, AND ALL GOVERNING LOCAL CODES, LAWS, AND/OR REGULATIONS.

4. SYSTEM AND EQUIPMENT GROUNDING CONTINUITY SHALL BE ASSURED AS REQUIRED BY APPLICABLE SECTIONS OF THE NATIONAL ELECTRICAL CODE.

5. ALL WIRING SHALL BE TYPE "XHHW-2" UNLESS OTHERWISE NOTED; MINIMUM WIRE SIZE SHALL BE #12 AWG FOR POWER AND #14 AWG FOR CONTROL. ALL WIRE SHALL BE COPPER. MINIMUM CONDUIT SIZE SHALL BE 3/4".

6. ALL CIRCUIT PROTECTIVE DEVICES SHALL HAVE THE REQUIRED RATING INTERRUPTING CAPACITY EQUAL TO OR GREATER THAN THE AVAILABLE SHORT-CIRCUIT CURRENT AT ITS SUPPLY TERMINAL.

7. BREATHERS AND DRAINS SHALL BE PROVIDED AT THE LOW POINT(S) OF ALL CONDUIT RUNS IN DAMP AND WET AREAS, AND WHERE OTHERWISE SUBJECT TO THE ACCUMULATION OF CONDENSATION. CONDUITS SHALL BE ARRANGED TO DRAIN AWAY FROM DRY AREAS TOWARD DAMP OR WET AREAS, AND AWAY FROM EQUIPMENT AND ENCLOSURES.

BRANCH CIRCUIT WIRE SIZE:

1. FOR BRANCH CIRCUITS WHERE THE WIRE SIZE IS NOT INDICATED ON THE PLANS, PROVIDE WIRE AND CONDUIT AS INDICATED BELOW.
   120 VOLT, 15 AND 20 AMP CIRCUITS:
   - CONDUCTOR LENGTH OF 75 FEET OR LESS: (2) #12 AWG, (1) #12 AWG GND IN 3/4" CONDUIT.
   - CONDUCTOR LENGTH GREATER THAN 75 FEET: (2) #10 AWG, (1) #10 AWG GND IN 3/4" CONDUIT.
   - CONDUCTOR LENGTH GREATER THAN 115 FEET: (2) #8 AWG, (1) #8 AWG IN 3/4" CONDUIT.
   - CONDUCTOR LENGTH GREATER THAN 175 FEET: (2) #6 AWG, (1) #6 AWG IN 3/4" CONDUIT.
   - CONDUCTOR LENGTH GREATER THAN 265 FEET: (2) #4 AWG, (1) #4 AWG IN 1" CONDUIT.

2. FOR 15 AND 20 AMP CIRCUITS, SHORT TAPS OFF THE MAIN RUN TO INDIVIDUAL OUTLETS SHALL BE PERMITTED TO BE #12 AWG.

3. FOR CIRCUITS OTHER THAN THOSE LISTED ABOVE, CONDUCTORS SHALL BE SIZED PER THE NEC AND FOR A MAXIMUM BRANCH VOLTAGE DROP OF 3%, OR AS OTHERWISE INDICATED ON THE PLANS.

4. FOR CIRCUITS OTHER THAN THOSE LISTED ABOVE, CONDUITS SHALL BE SIZED PER THE NEC, OR AS OTHERWISE INDICATED ON THE PLANS.

5. WHEN THE REQUIRED WIRE SIZE IS LARGER THAN THE BRANCH CIRCUIT BREAKER OR EQUIPMENT TERMINATION PROVISION, CONTRACTOR SHALL PROVIDE A SPLICE TO A SMALLER WIRE TO MAKE THE TERMINATION. SUCH SPLICE SHALL BE MADE IN ACCORDANCE WITH THE NEC AND LOCATED AS NEAR AS PRACTICABLE TO THE TERMINATION.

INTERCONNECTION OF EQUIPMENT:

1. PROVIDE FIELD INTERCONNECTING CONDUIT AND WIRING (POWER AND CONTROL) FOR ALL NEW AND RE-USED EXISTING EQUIPMENT AS INDICATED ON THESE DRAWINGS, THE INSTRUMENTATION DRAWINGS AND THE SPECIFICATIONS.

2. REFER TO PROCESS DRAWINGS FOR SPECIFIC LOCATIONS OF NEW EQUIPMENT AND DEVICES REQUIRING FIELD INTERCONNECTION.

3. POWER INTERCONNECTIONS:
   - REFER TO ONELINE DIAGRAMS
   - FOR POWER CIRCUITS NOT SHOWN ON THE ONELINE DIAGRAMS, OR ELSEWHERE ON THESE DRAWINGS, PROVIDE CIRCUITS SIZED IN ACCORDANCE WITH THE NATIONAL ELECTRICAL CODE. MINIMUM CONDUCTOR SIZE SHALL BE #12 AWG. MINIMUM CONDUIT SIZE SHALL BE 3/4"

4. INSTRUMENTATION AND CONTROL (I&C) INTERCONNECTIONS:
   - FOR EACH DISCRETE SIGNAL, PROVIDE (2) #14 AWG.
   - FOR EACH ANALOG SIGNAL, PROVIDE (1) CABLE WITH ONE #16 AWG TWISTED SHIELDED PAIR OR TRIAD AS REQUIRED.
   - ALL WIRING SHALL BE IN CONDUIT, MINIMUM SIZE 3/4", OR OTHER APPROVED RACEWAY.
   - FOR EACH RACEWAY CONTAINING EITHER DISCRETE OR ANALOG SIGNAL WIRING, ALSO PROVIDE (1) #14 AWG EQUIPMENT GROUND CONDUCTOR.
   - MULTIPLE SIGNALS OF THE SAME TYPE (DISCRETE OR ANALOG) MAY BE GROUPED IN A SINGLE CONDUIT. DO NOT GROUP DISCRETE SIGNAL WIRING WITH ANALOG SIGNAL WIRING, AND DO NOT GROUP 120V DISCRETE SIGNAL WIRING WITH 12V OR 24V DISCRETE SIGNAL WIRING.

5. MAINTAIN SEGREGATION BETWEEN THE FOLLOWING SYSTEMS; DO NOT GROUP EITHER POWER OR I&C WIRING OF DIFFERENT SYSTEMS IN THE SAME RACEWAYS:
   - REDUNDANT CHEMICAL SYSTEMS
   - REDUNDANT UV SYSTEMS

DEMOLITION:

1. REFER TO PROCESS AND MECHANICAL PLANS FOR EXISTING EQUIPMENT TO BE REMOVED.

2. FOR EACH ITEM INDICATED AS TO BE REMOVED (REGARDLESS OF WHICH DRAWING IT IS SHOWN ON) ALSO REMOVE ALL EXISTING ASSOCIATED CONDUIT AND WIRING BACK TO SOURCE OR NEAREST CIRCUIT TO REMAIN, AS WELL AS ALL ANCILLARY ITEMS.

3. COORDINATE ALL REMOVALS WITH THE OWNER.

WIRE SEPARATION NOTES:

1. SIGNAL CIRCUITS AND ALARM CIRCUITS SHALL BE RUN IN CONDUITS SEPARATE FROM ALL OTHER WIRING.

2. SERVICE ENTRANCE, GENERATOR AND ALL LARGE FEEDERS SHALL BE IN SEPARATE CONDUITS.

3. SEPARATE WIRING INTO RACEWAY BY LEVELS AS FOLLOWS:
   A. LEVEL 1
      1) ANALOG SIGNALS LESS THAN 50 VOLTS AND LESS 50 MILLIAMP.
         1. 4-20ma SHIELDED INSTRUMENTATION.
         2. SHIELDED LOW LEVEL INSTRUMENTATION.
         3. VARIABLE SPEED DRIVE SPEED SIGNALS.
      2) DIGITAL SIGNAL AND DATA BUSSES
         1. PROGRAMMABLE LOGIC CONTROLLER BUSSES.
         2. METERING SYSTEM DATA BUS.
         3. INSTRUMENTATION REMOTE TERMINAL UNIT BUS.
   B. LEVEL 2
      1) ANALOG SIGNAL OVER 50 VOLTS AND LESS THAN 250 VOLTS
         1. TACHOMETER GENERATORS.
      2) DIGITAL AND DISCRETE INPUTS TO PROGRAMMABLE LOGIC CONTROLLERS AND REMOTE TERMINAL UNITS ALL OUTPUTS SUPPLYING RELAY COILS SHALL HAVE PROPER SUPPRESSION.
   C. LEVEL 3
      1) POWER CIRCUITS OF 20 AMPERES OR LESS AND 120 VOLTS OR LESS
         1. LIGHTING AND RECEPTACLE CIRCUITS TO BE IN SEPARATE CONDUITS, UNLESS OTHERWISE NOTED.
         2. CLASS 1 CONTROL CIRCUITS ORIGINATING IN A MCC COMPARTMENT OR A MOTOR STARTER CAN BE ROUTED IN THE POWER CONDUIT FROM SAME COMPARTMENT.
   D. LEVEL 4
      1) POWER CIRCUITS OVER 20 AMPERES UP TO 400 AMPERES, 600 VOLTS. EACH CIRCUIT SHALL BE RUN IN SEPARATE CONDUITS.
   E. LEVEL 5
      1) FEEDERS OVER 400 AMPERES.

4. EACH LEVEL MUST BE RUN IN SEPARATE RACEWAYS.

5. UNLESS OTHERWISE NOTED, SEPARATE ALL PARALLEL RACEWAY RUN 5'-0" OR LONGER WITH DIFFERENT LEVELS AS FOLLOWS:

LEVEL	1	2	3	4	5
1	0	1"	3"	12"	12"
2	1"	0	3"	9"	12"
3	3"	3"	0	3"	6"
4	12"	9"	6'	0	3"

GROUPING OF MULTIPLE CIRCUITS IN A SINGLE RACEWAY:

MULTIPLE CIRCUITS MAY BE GROUPED IN A SINGLE CONSOLIDATED RACEWAY, SUBJECT TO THE RESTRICTIONS AND REQUIREMENTS OUTLINED BELOW.

1. UNLESS EXPLICITLY SHOWN OTHERWISE, ALL CIRCUITS LISTED BELOW SHALL BE INSTALLED IN THEIR OWN INDIVIDUAL RACEWAYS; THESE CIRCUITS MAY NOT BE GROUPED WITH OTHER CIRCUITS. REFER TO THE NATIONAL ELECTRICAL CODE FOR THE DEFINITIONS OF "FEEDER" AND "BRANCH CIRCUIT".
   - ALL FEEDERS
   - BRANCH CIRCUITS SERVING MOTOR LOADS (INCLUDING CHEMICAL FEED PUMPS AND MOTOR OPERATED VALVES)
   - BRANCH CIRCUITS SERVING HVAC AIR HANDLERS / ROOFTOP UNITS AND OTHER ROOFTOP-MOUNTED EQUIPMENT
   - BRANCH CIRCUITS RATED 40A OR GREATER

2. WHERE BRANCH CIRCUITS ARE PERMITTED TO BE GROUPED, DO NOT EXCEED MORE THAN FOUR CIRCUITS IN A SINGLE RACEWAY. UPSIZE THE CONDUCTORS AS REQUIRED TO COMPLY WITH NATIONAL ELECTRICAL CODE REQUIREMENTS FOR MULTIPLE CURRENT CARRYING CONDUCTORS IN A SINGLE RACEWAY, AND UPSIZE THE RACEWAY AS REQUIRED TO COMPLY WITH APPLICABLE LIMITS ON MAXIMUM CONDUCTOR FILL.

3. DO NOT GROUP CIRCUITS WHICH ORIGINATE FROM DIFFERENT SOURCES.

THIS DRAWING IS AND SHALL REMAIN THE PROPERTY OF GANNETT FLEMING, INC. ANY MISUSE, REUSE, ALTERATIONS, ADDITIONS, AND/OR DELETIONS OF THESE DRAWINGS ON PROJECT EXTENSIONS OR OTHER PROJECTS SHALL BE AT THE USER'S SOLE RISK AND WITHOUT LIABILITY TO GANNETT FLEMING, INC. IN THE EVENT THAT A CONFLICT ARISES BETWEEN THE SEALED DRAWINGS AND THE ELECTRONIC FILES, THE SEALED DRAWINGS WILL GOVERN.

CHARLES J GREW
LICENSED PROFESSIONAL ENGINEER
NO. 24GE05275300

2 EXECUTIVE DRIVE, SUITE 100
MARLTON, NEW JERSEY 08053
CERTIFICATE OF AUTHORIZATION NO. 24GA28032500

© GANNETT FLEMING, INC. 2022

No.	DESCRIPTION	DATE	BY

REVISIONS

DESIGNED	CADD	SCALE
RH	OM	AS NOTED
CHECKED	APPROVED	APPROVED
BAS	BAS	X.X.X

GANNETT FLEMING
HARRISBURG, PENNSYLVANIA

NORTH JERSEY DISTRICT WATER SUPPLY COMMISSION
WANAQUE, NEW JERSEY

FILTER REHAB

BID SET

ELECTRICAL NOTES

JOB No. 72743
DATE AUGUST 2023
SHEET No. E-02

FILE PATH: C:\Users\csmith\ACCDocs\GANNETT FLEMING INC\072743-NJDWSC_Filter_Rehab\Project Files\Design\FAC\ELEC\Wrkg\72743 E02.dwg
DATE SAVED: 2/20/2023 10:33 AM BY: martman DATE PLOTTED: 7/28/2023 12:12 PM

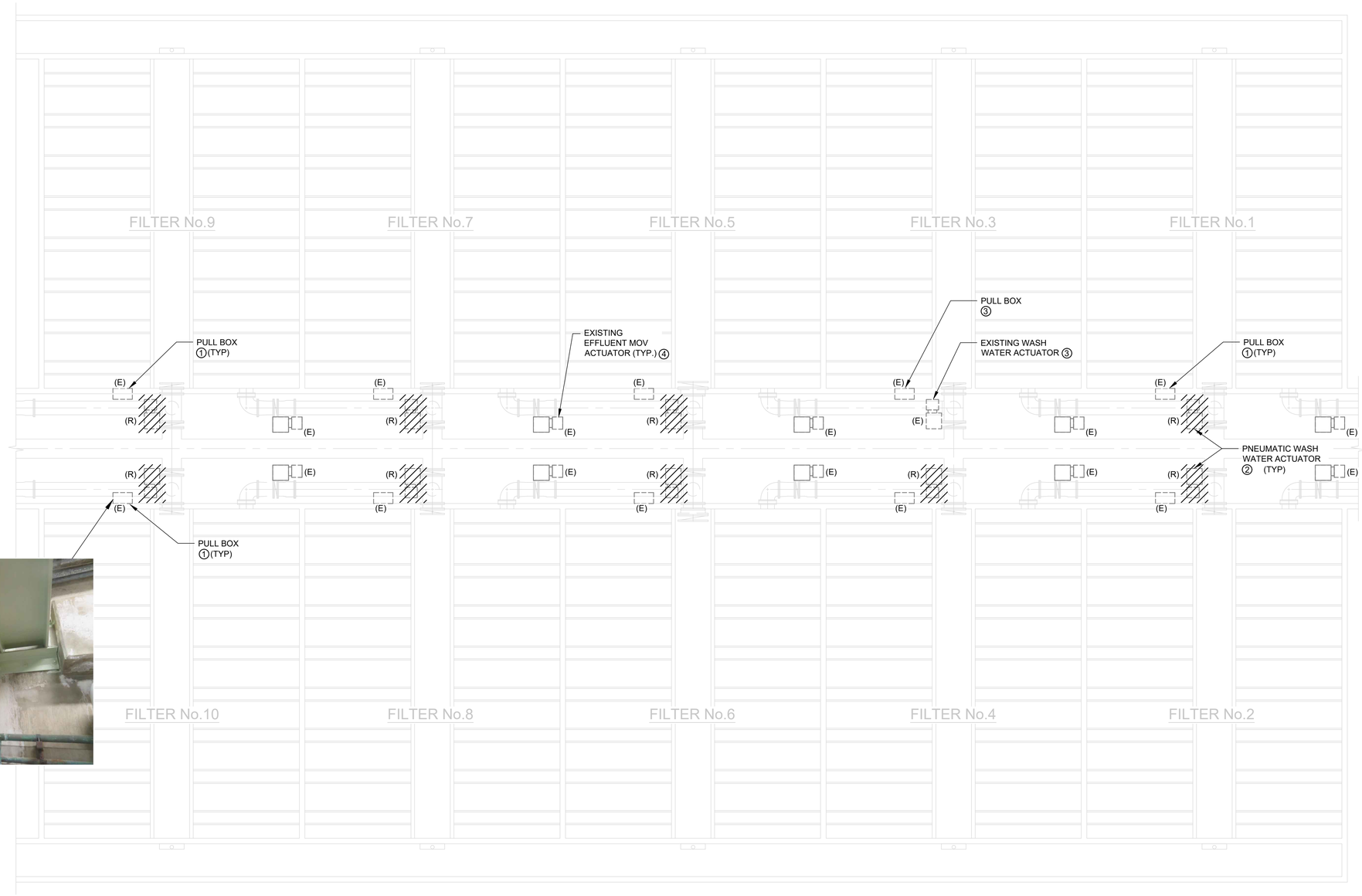

1 ELECTRICAL BASEMENT DEMOLITION PLAN
SCALE: 3/32" = 1' - 0"

SHEET NOTES:

1. REFER TO SHEET E-01 FOR SYMBOLS AND ABBREVIATIONS.
2. REFER TO SHEET E-02 FOR ELECTRICAL NOTES.

KEY NOTES:

1. PULL BOX (EXISTING TO REMAIN):
   a. THERE SHALL NOT BE ANY COMMUNICATION CABLES AND POWER CABLES SHARED IN THE SAME PULL BOX OR RACEWAY WITHOUT PROPER SEPARATION PER NEC ARTICLE 805.133.A.1.c.
   b. REMOVE BACK PANEL OF EXISTING PULL BOX AND REPLACE WITH NEW 316 STAINLESS STEEL BACK PANEL.
   c. REMOVE TERMINAL BLOCK. POWER CABLES ARE EXISTING TO REMAIN AND SHALL BE PROTECTED.
   e. REMOVE ALL CONTROL/ MONITORING WIRE AND CONDUIT IN THE PULL BOX BACK TO SOURCE AND TERMINATION POINT (EXCEPT CONDUITS AS NOTED IN KEYNOTE 1f SHALL REMAIN). REMOVE ABANDONED POWER CABLES AND CONDUIT BACK TO SOURCE AND TERMINATION POINT UON.
   f. EXISTING 4" CONDUIT AND 3/4" CONDUIT (WITHIN 4" CONDUIT) ARE EXISTING TO REMAIN.
   d. SEAL ALL UNUSED OPENINGS IN PULL BOX.
2. REFER TO PROCESS DRAWINGS FOR REMOVAL OF PNEUMATIC WASH WATER ACTUATORS. REMOVE ALL WIRING AND CONDUIT BACK TO SOURCE.
3. THERE IS NO ELECTRICAL POWER WORK FOR FILTER 3. INSTRUMENTATION AND CONTROLS SCOPE IS LIMITED TO EXTENDING THE PROFIBUS WIRING FROM FILTER 3 DRAIN MOV ACTUATOR TO ACTUATORS FOR FILTER 4 VALVES.
4. THERE IS NO ELECTRICAL POWER WORK FOR THE EFFLUENT ACTUATORS. REMOVE EXISTING CONTROL CONDUIT BETWEEN PULL BOXES AND ASSOCIATED EFFLUENT MOV ACTUATORS. REMOVE EXISTING CONTROL WIRING BACK TO SOURCE. THIS WORK IS NOT APPLICABLE TO FILTER 3.

THIS DRAWING IS AND SHALL REMAIN THE PROPERTY OF GANNETT FLEMING, INC. ANY MISUSE, REUSE, ALTERATIONS, ADDITIONS, AND/OR DELETIONS OF THESE DRAWINGS ON PROJECT EXTENSIONS OR OTHER PROJECTS SHALL BE AT THE USER'S SOLE RISK AND WITHOUT LIABILITY TO GANNETT FLEMING, INC. IN THE EVENT THAT A CONFLICT ARISES BETWEEN THE SEALED DRAWINGS AND THE ELECTRONIC FILES, THE SEALED DRAWINGS WILL GOVERN.

CHARLES J GREW
LICENSED PROFESSIONAL ENGINEER
NO. 24GE05275300
2 EXECUTIVE DRIVE, SUITE 100
MARLTON, NEW JERSEY 08053
CERTIFICATE OF AUTHORIZATION NO. 24GA28032500

© GANNETT FLEMING, INC. 2022

No.	DESCRIPTION	DATE	BY

REVISIONS

DESIGNED	CADD	SCALE
RH	OM	AS NOTED
CHECKED	APPROVED	APPROVED
BAS	BAS	X.X.X

GANNETT FLEMING
HARRISBURG, PENNSYLVANIA

NORTH JERSEY DISTRICT WATER SUPPLY COMMISSION
WANAQUE, NEW JERSEY

FILTER REHAB

BID SET

ELECTRICAL
BASEMENT DEMOLITION PLAN

JOB No. 72743
DATE AUGUST 2023
SHEET No. ED-01

FILE PATH: C:\Users\csmith\ACCDocs\GANNETT FLEMING INC\072743-NJDWSC_Filter_Rehab\Project Files\Design\FAC\ELEC\Wkg\72743 ED01.dwg
DATE SAVED: 7/28/2023 12:06 PM BY: csmith DATE PLOTTED: 7/28/2023 12:07 PM

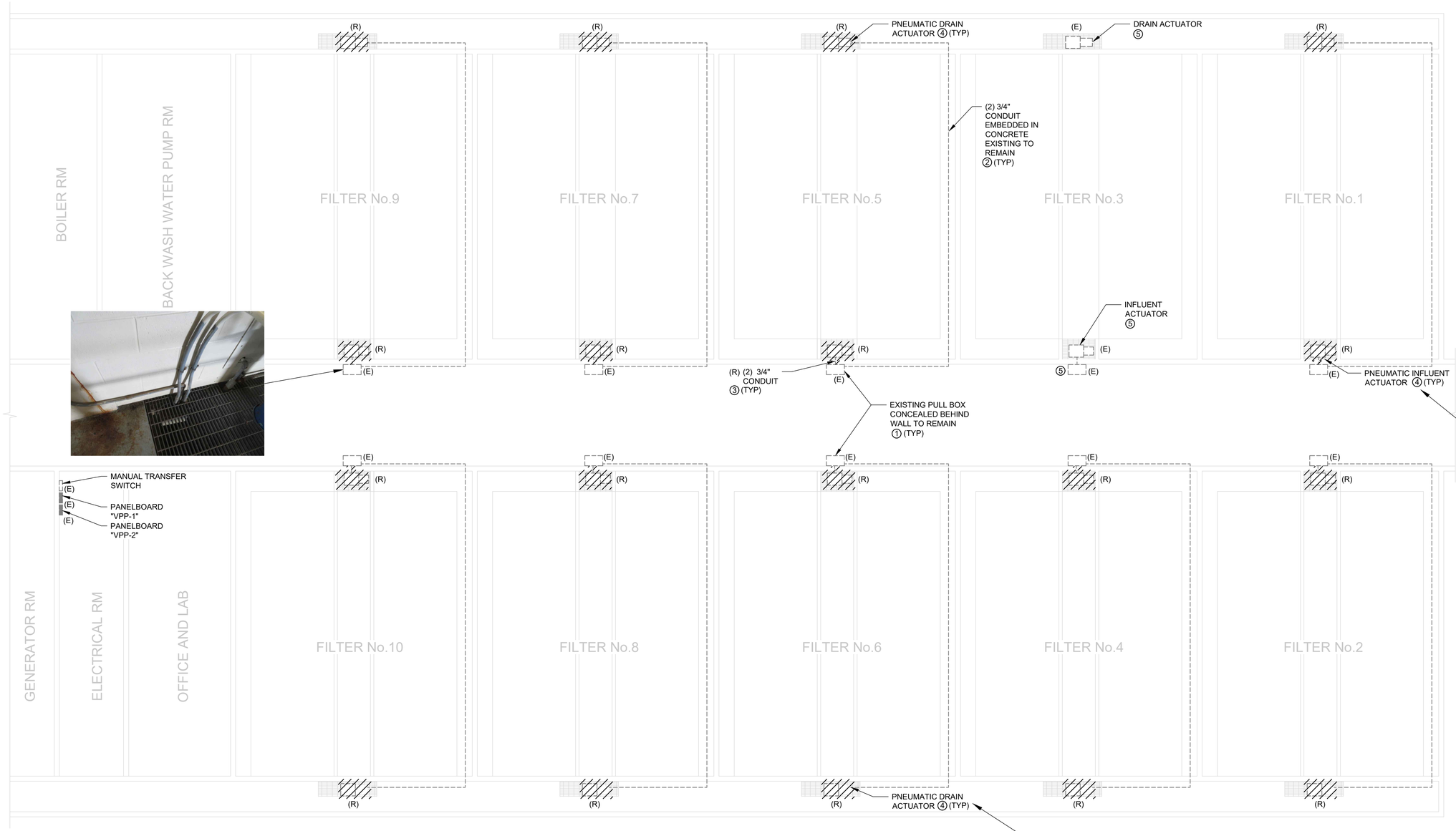

1 ELECTRICAL GROUND FLOOR DEMOLITION PLAN
SCALE: 3/32" = 1' - 0"

SHEET NOTES:

1. REFER TO SHEET E-01 FOR SYMBOLS AND ABBREVIATIONS.
2. REFER TO SHEET E-02 FOR ELECTRICAL NOTES.

KEY NOTES:

1. PULL BOX (EXISTING TO REMAIN):
   a. THERE SHALL NOT BE ANY COMMUNICATION CABLES AND POWER CABLES SHARED IN THE SAME PULL BOX OR RACEWAY WITHOUT PROPER SEPARATION PER NEC ARTICLE 805.133.A.1.c.
   b. VERIFY AND REMOVE ABANDONED WIRES IN PULL BOX BACK TO SOURCE AND TERMINATION POINT.
   c. SEAL ALL UNUSED OPENINGS IN EXISTING PULL BOX.
2. REMOVE ALL WIRING IN EXISTING (2) 3/4" CONDUITS EMBEDDED IN CONCRETE. REMOVE ANY EXPOSED CONDUIT AND ASSOCIATED WIRING FROM GROUND LEVEL PULL BOX TO DRAIN ACTUATORS.
3. REMOVE (2) 3/4" CONDUITS AND ASSOCIATED WIRING AND JUNCTION BOX FROM GROUND LEVEL PULL BOX TO INFLUENT ACTUATORS.
4. REFER TO PROCESS DRAWINGS FOR REMOVAL OF EXISTING PNEUMATIC INFLUENT AND DRAIN ACTUATORS. REMOVE ALL WIRING BACK TO SOURCE.
5. THERE IS NO ELECTRICAL POWER WORK FOR FILTER 3. INSTRUMENTATION AND CONTROLS SCOPE IS LIMITED TO EXTENDING THE PROFIBUS WIRING FROM FILTER 3 DRAIN MOV ACTUATOR TO ACTUATORS FOR FILTER 4 VALVES.

THIS DRAWING IS AND SHALL REMAIN THE PROPERTY OF GANNETT FLEMING, INC. ANY MISUSE, REUSE, ALTERATIONS, ADDITIONS, AND/OR DELETIONS OF THESE DRAWINGS ON PROJECT EXTENSIONS OR OTHER PROJECTS SHALL BE AT THE USER'S SOLE RISK AND WITHOUT LIABILITY TO GANNETT FLEMING, INC. IN THE EVENT THAT A CONFLICT ARISES BETWEEN THE SEALED DRAWINGS AND THE ELECTRONIC FILES, THE SEALED DRAWINGS WILL GOVERN.

CHARLES J GREW
LICENSED PROFESSIONAL ENGINEER
NO. 24GE05275300
2 EXECUTIVE DRIVE, SUITE 100
MARLTON, NEW JERSEY 08053
CERTIFICATE OF AUTHORIZATION NO. 24GA28032500

© GANNETT FLEMING, INC. 2022

No.	DESCRIPTION	DATE	BY

REVISIONS

DESIGNED	CADD	SCALE
RH	OM	AS NOTED
CHECKED	APPROVED	APPROVED
BAS	BAS	X.X.X

GANNETT FLEMING
HARRISBURG, PENNSYLVANIA

NORTH JERSEY DISTRICT WATER SUPPLY COMMISSION
WANAQUE, NEW JERSEY

FILTER REHAB

BID SET

ELECTRICAL
GROUND FLOOR DEMOLITION PLAN

JOB No. 72743
DATE AUGUST 2023
SHEET No. ED-02

FILE PATH: C:\Users\csmith\ACCDocs\GANNETT FLEMING INC\072743-NJDWSC_Filter_Rehab\Project Files\Design\FAC\ELEC\Wrkg\72743 ED02.dwg
DATE SAVED: 7/28/2023 12:04 PM BY: csmith DATE PLOTTED: 7/28/2023 12:09 PM

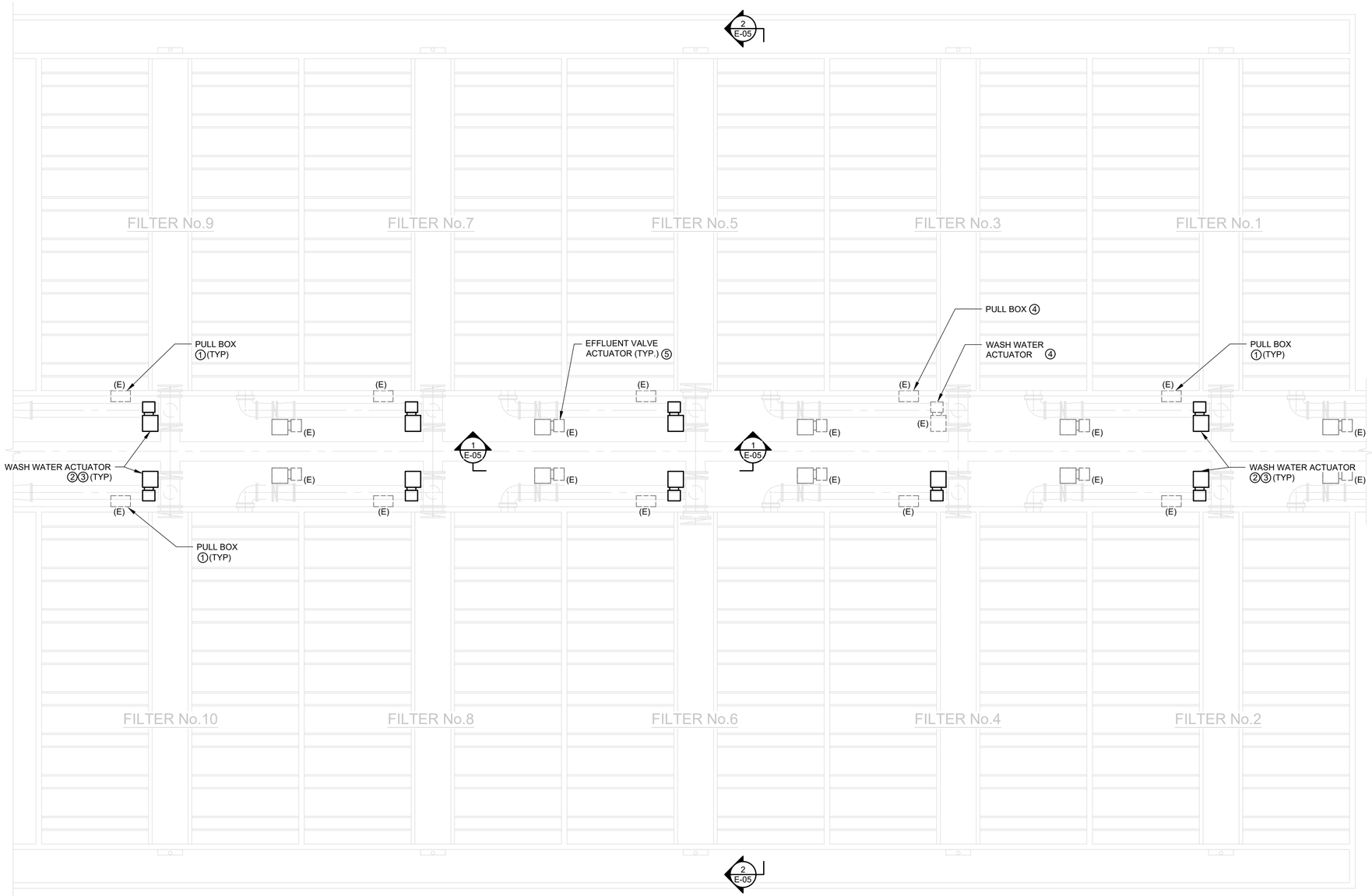

1 ELECTRICAL BASEMENT POWER PLAN
SCALE: 3/32" = 1' - 0"

SHEET NOTES:

1. REFER TO SHEET E-01 FOR SYMBOLS AND ABBREVIATIONS.
2. REFER TO SHEET E-02 FOR ELECTRICAL NOTES.

KEY NOTES:

1. PULL BOX:
   a. PROVIDE PERMANENT BARRIER OR LISTED DIVIDER IN PULL BOX TO SEPARATE THE COMMUNICATION CABLES FROM THE POWER CABLES PER NEC ARTICLE 805.133.A.1.c EXCEPTION NO. 2. THERE SHALL NOT BE ANY COMMUNICATION CABLES AND POWER CABLES SHARED IN THE SAME PULL BOX WITHOUT PROPER SEPARATION PER ARTICLE 805.133.A.1.c.
   b. REPLACE BACK PANEL OF PULL BOX WITH NEW 316 STAINLESS STEEL BACK PANEL.
   c. POWER CABLES IN EACH PULL BOX SHALL FEED (3) NEW ELECTRIC VALVE ACTUATORS. ALL SPLICING SHALL BE DONE IN THE PULL BOX PER NEC.
   d. PROVIDE NEW 4-20mA TERMINAL BLOCK FOR ANALOG SIGNALS.
2. WASH WATER ACTUATOR:
   a. PROVIDE POWER CABLES AND 3/4" CONDUIT TO NEW ELECTRIC VALVE ACTUATOR FROM PULL BOX (TOTAL OF (9) ACTUATORS). PROVIDE ALL SPLICING REQUIRED IN THE PULL BOX PER NEC. CABLE SIZE SHALL MATCH EXISTING CABLE SIZE.
   b. PROVIDE PROFIBUS CABLE AND CONDUIT TO ACTUATOR FOR CONTROL AND MONITORING FUNCTIONS. REFER TO SCHEMATIC DIAGRAM ON DRAWING E-07 FOR PROFIBUS CABLE ROUTING.
   c. POWER CABLES AND PROFIBUS CABLE SHALL BE SEPARATED IN PULL BOX BY PERMANENT BARRIER OR LISTED DIVIDER. POWER CABLES AND PROFIBUS CABLES SHALL BE IN SEPARATE CONDUITS.
3. ALL CIRCUIT BREAKERS IN PANELBOARD "VPP-2" FEEDING NEW MOTORIZED ACTUATORS SHALL BE CAPABLE OF BEING LOCKED IN THE "OFF" POSITION PER NEC. PROVIDE WRITTEN SAFETY PROCEDURES, WHERE CONDITIONS OF MAINTENANCE AND SUPERVISION ENSURE THAT ONLY QUALIFIED PERSONS SERVICE THE EQUIPMENT PER NEC. REFER TO SHEET E-04 FOR LOCATION OF ELECTRICAL PANELBOARD "VPP-2".
4. THERE IS NO ELECTRICAL POWER WORK FOR FILTER 3. INSTRUMENTATION AND CONTROLS SCOPE IS LIMITED TO EXTENDING THE PROFIBUS WIRING FROM FILTER 3 DRAIN MOV ACTUATOR TO ACTUATORS FOR FILTER 4 VALVES.
5. EFFLUENT ACTUATOR:
   a. POWER TO EFFLUENT VALVE ACTUATORS IS EXISTING TO REMAIN.
   b. PROVIDE CONDUIT AND PROFIBUS CABLE TO EFFLUENT VALVE ACTUATOR FOR CONTROL AND MONITORING FUNCTIONS (TOTAL OF (9) ACTUATORS). REFER TO SCHEMATIC DIAGRAM ON DRAWING E-07 FOR PROFIBUS CABLE ROUTING.
   c. POWER CABLES AND PROFIBUS CABLE SHALL BE SEPARATED IN PULL BOX BY PERMANENT BARRIER OR LISTED DIVIDER. POWER CABLES AND PROFIBUS CABLES SHALL BE IN SEPARATE CONDUITS.

THIS DRAWING IS AND SHALL REMAIN THE PROPERTY OF GANNETT FLEMING, INC. ANY MISUSE, REUSE, ALTERATIONS, ADDITIONS, AND/OR DELETIONS OF THESE DRAWINGS ON PROJECT EXTENSIONS OR OTHER PROJECTS SHALL BE AT THE USER'S SOLE RISK AND WITHOUT LIABILITY TO GANNETT FLEMING, INC. IN THE EVENT THAT A CONFLICT ARISES BETWEEN THE SEALED DRAWINGS AND THE ELECTRONIC FILES, THE SEALED DRAWINGS WILL GOVERN.

CHARLES J GREW
LICENSED PROFESSIONAL ENGINEER
NO. 24GE05275300
2 EXECUTIVE DRIVE, SUITE 100
MARLTON, NEW JERSEY 08053
CERTIFICATE OF AUTHORIZATION NO. 24GA28032500

© GANNETT FLEMING, INC. 2022

No.	DESCRIPTION	DATE	BY

REVISIONS

DESIGNED	CADD	SCALE
RH	OM	AS NOTED
CHECKED	APPROVED	APPROVED
BAS	BAS	X.X.X

GANNETT FLEMING
HARRISBURG, PENNSYLVANIA

NORTH JERSEY DISTRICT WATER SUPPLY COMMISSION
WANAQUE, NEW JERSEY

FILTER REHAB

BID SET

ELECTRICAL
BASEMENT POWER PLAN

JOB No. 72743
DATE AUGUST 2023
SHEET No. E-03

FILE PATH: C:\Users\csmith\ACCDocs\GANNETT FLEMING INC\072743-NJDWSC_Filter_Rehab\Project Files\Design\FACI\ELEC\Wkg\72743 E03.dwg
DATE SAVED: 2/20/2023 10:53 AM BY: martman DATE PLOTTED: 7/28/2023 12:13 PM

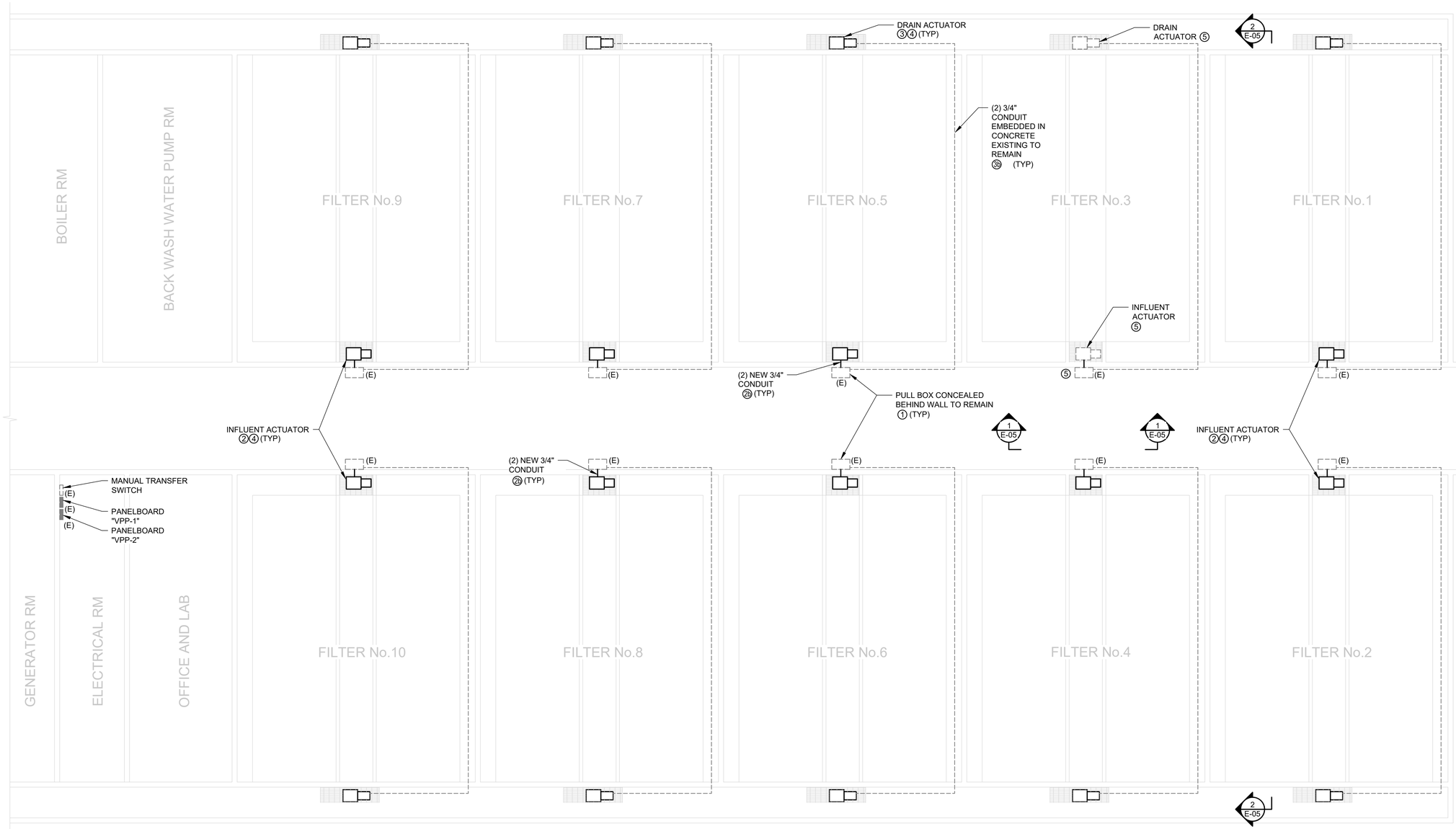

1 ELECTRICAL GROUND FLOOR POWER PLAN

SCALE: 3/32" = 1' - 0"

SHEET NOTES:

1. REFER TO SHEET E-01 FOR SYMBOLS AND ABBREVIATIONS.
2. REFER TO SHEET E-02 FOR ELECTRICAL NOTES.

KEY NOTES:

1. PULL BOX:
   a. THERE SHALL NOT BE ANY COMMUNICATION CABLES AND POWER CABLES SHARED IN THE SAME PULL BOX WITHOUT PROPER SEPARATION PER ARTICLE 805.133.A.1.c.
   b. PROVIDE 3/4" INNER CONDUIT IN GROUND LEVEL PULL BOX FOR PROFIBUS CABLES TO MAINTAIN SEPARATION OF POWER CABLES FROM COMMUNICATION CABLES PER NEC.
2. INFLUENT ACTUATOR:
   a. PROVIDE POWER CABLES TO NEW ELECTRIC VALVE ACTUATOR FROM PULL BOX SHOWN ON BASEMENT PLAN. POWER CABLES SHALL RUN THROUGH EXISTING 4"C FROM PULL BOX IN BASEMENT LEVEL TO THE GROUND LEVEL PULL BOX. PROVIDE ALL SPLICING REQUIRED IN THE BASEMENT PULL BOX PER NEC. CABLE SIZE SHALL MATCH EXISTING CABLE SIZE.
   b. PROVIDE NEW (2) 3/4"C FROM GROUND LEVEL PULL BOX TO INFLUENT ACTUATOR. ONE CONDUIT FOR POWER CABLES AND ONE CONDUIT FOR PROFIBUS CABLES.
   c. PROVIDE PROFIBUS CABLE TO ACTUATOR FOR CONTROL AND MONITORING FUNCTIONS. REFER TO SCHEMATIC DIAGRAM ON DRAWING E-07 FOR PROFIBUS CABLE ROUTING.
   d. POWER CABLES AND PROFIBUS CABLE SHALL BE SEPARATED IN PULL BOX PER NEC. POWER CABLES AND PROFIBUS CABLES SHALL BE IN SEPARATE CONDUITS.
3. DRAIN ACTUATOR:
   a. PROVIDE POWER CABLES TO NEW ELECTRIC VALVE ACTUATOR FROM PULL BOX SHOWN ON BASEMENT PLAN. CABLES SHALL RUN THROUGH EXISTING 4"C FROM PULL BOX IN BASEMENT LEVEL TO THE GROUND LEVEL PULL BOX. PROVIDE ALL SPLICING REQUIRED IN THE PULL BOX PER NEC. CABLE SIZE SHALL MATCH EXISTING CABLE SIZE.
   b. RE-USE (2) EXISTING 3/4" C EMBEDDED IN CONCRETE TO THE NEW ELECTRIC VALVE ACTUATOR. EXTEND CONDUIT WITH EXPOSED CONDUIT TO COMPLETE THE CONDUIT ROUTING.
      ADD ALTERNATE: PROVIDE NEW (2) EXPOSED 3/4"C ALONG THE CEILING IF IT IS DETERMINED CONDUIT IS IN POOR CONDITION OR UNABLE TO PULL CABLES THROUGH CONDUIT. CAP ABANDONED CONDUITS.
   c. PROVIDE PROFIBUS CABLE TO ACTUATOR FOR CONTROL AND MONITORING FUNCTIONS. REFER TO SCHEMATIC DIAGRAM ON DRAWING E-07 FOR PROFIBUS CABLE ROUTING.
   d. POWER CABLES AND PROFIBUS CABLE SHALL BE SEPARATED IN PULL BOX PER NEC. POWER CABLES AND PROFIBUS CABLES SHALL BE IN SEPARATE CONDUITS.
4. ALL CIRCUIT BREAKERS IN PANELBOARD "VPP-2" FEEDING NEW MOTORIZED ACTUATORS SHALL BE CAPABLE OF BEING LOCKED IN THE "OFF" POSITION. PROVIDE WRITTEN SAFETY PROCEDURES, WHERE CONDITIONS OF MAINTENANCE AND SUPERVISION ENSURE THAT ONLY QUALIFIED PERSONS SERVICE THE EQUIPMENT PER NEC.
5. THERE IS NO ELECTRICAL POWER WORK FOR FILTER 3. INSTRUMENTATION AND CONTROLS SCOPE IS LIMITED TO EXTENDING THE PROFIBUS WIRING FROM FILTER 3 DRAIN MOV ACTUATOR TO ACTUATORS FOR FILTER 4 VALVES.

THIS DRAWING IS AND SHALL REMAIN THE PROPERTY OF GANNETT FLEMING, INC. ANY MISUSE, REUSE, ALTERATIONS, ADDITIONS, AND/OR DELETIONS OF THESE DRAWINGS ON PROJECT EXTENSIONS OR OTHER PROJECTS SHALL BE AT THE USER'S SOLE RISK AND WITHOUT LIABILITY TO GANNETT FLEMING, INC. IN THE EVENT THAT A CONFLICT ARISES BETWEEN THE SEALED DRAWINGS AND THE ELECTRONIC FILES, THE SEALED DRAWINGS WILL GOVERN.

CHARLES J GREW
LICENSED PROFESSIONAL ENGINEER
NO. 24GE05275300

2 EXECUTIVE DRIVE, SUITE 100
MARLTON, NEW JERSEY 08053
CERTIFICATE OF AUTHORIZATION NO. 24GA28032500

© GANNETT FLEMING, INC. 2022

No.	DESCRIPTION	DATE	BY

REVISIONS

DESIGNED	CADD	SCALE
RH	OM	AS NOTED
CHECKED	APPROVED	APPROVED
BAS	BAS	X.X.X

GANNETT FLEMING

HARRISBURG, PENNSYLVANIA

NORTH JERSEY DISTRICT WATER SUPPLY COMMISSION
WANAQUE, NEW JERSEY

FILTER REHAB

BID SET

ELECTRICAL
GROUND FLOOR POWER PLAN

JOB No. 72743

DATE AUGUST 2023

SHEET No. E-04

FILE PATH: C:\Users\csmith\ACCDocs\GANNETT FLEMING INC\072743-NJDWSC_Filter_Rehab\Project Files\Design\FAC\ELEC\Wkg\72743 E04.dwg
DATE SAVED: 2/20/2023 10:53 AM BY: martman DATE PLOTTED: 7/28/2023 12:15 PM

SHEET NOTES:

1. SECTION PLANS PROVIDED FOR DIAGRAMMATIC LOCATIONS OF ACTUATORS. REFER TO DRAWINGS E-03 AND E-04 FOR MORE INFORMATION.

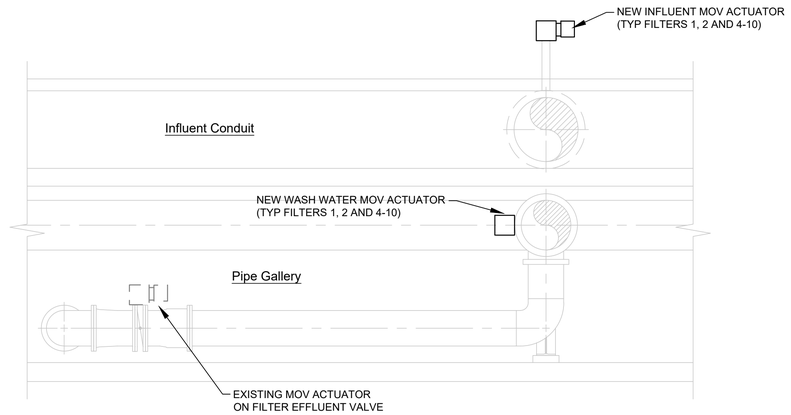

1 ELECTRICAL SECTION 1
SCALE: 3/16" = 1' - 0"

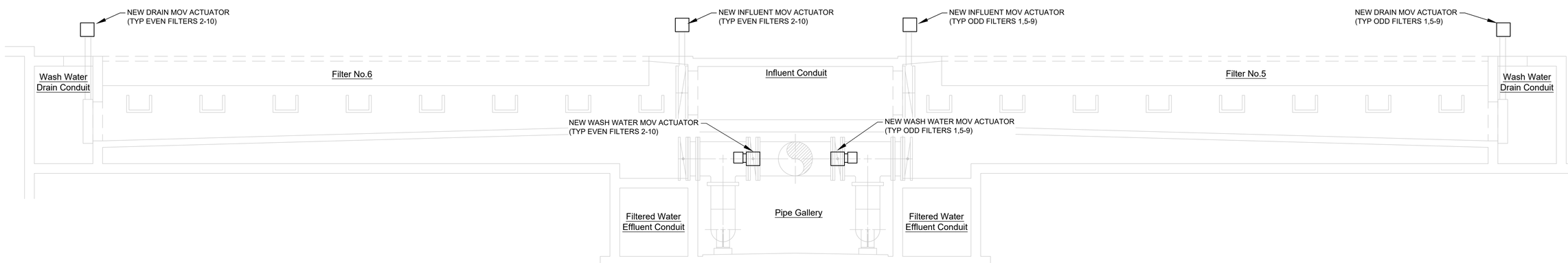

2 ELECTRICAL SECTION 2
SCALE: 3/16" = 1' - 0"

THIS DRAWING IS AND SHALL REMAIN THE PROPERTY OF GANNETT FLEMING, INC. ANY MISUSE, REUSE, ALTERATIONS, ADDITIONS, AND/OR DELETIONS OF THESE DRAWINGS ON PROJECT EXTENSIONS OR OTHER PROJECTS SHALL BE AT THE USER'S SOLE RISK AND WITHOUT LIABILITY TO GANNETT FLEMING, INC. IN THE EVENT THAT A CONFLICT ARISES BETWEEN THE SEALED DRAWINGS AND THE ELECTRONIC FILES, THE SEALED DRAWINGS WILL GOVERN.

CHARLES J GREW
LICENSED PROFESSIONAL ENGINEER
NO. 24GE05275300
2 EXECUTIVE DRIVE, SUITE 100
MARLTON, NEW JERSEY 08053
CERTIFICATE OF AUTHORIZATION NO. 24GA28032500

© GANNETT FLEMING, INC. 2022

No.	DESCRIPTION	DATE	BY

REVISIONS

DESIGNED	CADD	SCALE
RH	OM	AS NOTED
CHECKED	APPROVED	APPROVED
BAS	BAS	X.X.X

GANNETT FLEMING
HARRISBURG, PENNSYLVANIA

NORTH JERSEY DISTRICT WATER SUPPLY COMMISSION
WANAQUE, NEW JERSEY

FILTER REHAB

BID SET

ELECTRICAL
SECTIONS PLANS

JOB No. 72743
DATE AUGUST 2023
SHEET No. E-05

FILE PATH: C:\Users\csmith\ACCDocs\GANNETT FLEMING INC\72743-NJDWSC_Filter_Rehab\Project Files\Design\FAC\ELEC\Wrkg\72743 E05.dwg
DATE SAVED: 2/20/2023 10:53 AM BY: rhartman DATE PLOTTED: 7/28/2023 12:16 PM

PANEL DESIGNATION	MANUFACTURER: SIEMENS	LOCATION: GROUND LEVEL ELECTRICAL RM
	TYPE:	VOLTAGE: 480Y/277V, 3Ø, 4W
VPP-2 (EXISTING)	MAIN BUS RATING: 250A	PANEL MOUNTING: SURFACE
	MAIN RATING: 60A MCB	PANEL ENCLOSURE:
	NUMBER OF POLES: 42	PANEL MIN ARC RATING:

CKT. NO.	CKT. BKR.	DESCRIPTION	LOAD - KVA A	LOAD - KVA B	LOAD - KVA C	LOAD - KVA A	LOAD - KVA B	LOAD - KVA C	DESCRIPTION	CKT. BKR.	CKT. NO.
1			1			1					2
3	20/3	(E) FILTER 1		1			1		(E) FILTER 2	20/3	4
5					1			1			6
7			-			1					8
9	20/3	(E) FILTER 3		-			1		(E) FILTER 4	20 /3	10
11					-			1			12
13			1			1					14
15	20 /3	(E) FILTER 5		1			1		(E) FILTER 6	20 /3	16
17					1			1			18
19			1			1					20
21	20 /3	(E) FILTER 7		1			1		(E) FILTER 8	20 /3	22
23					1			1			24
25			1			1					26
27	20 /3	(E) FILTER 9		1			1		(E) FILTER 10	20 /3	28
29					1			1			30
31			-			-					32
33	20 /3	(EXISTING)		-			-		(EXISTING)	20 /3	34
35					-			-			36
37			-			-			(BLANK)		38
39	20 /3	(EXISTING)		-			-		(BLANK)		40
41					-			-	(BLANK)		42
		TOTAL	-	-	-	-	-	-	TOTAL		

PANEL CONNECTED LOAD							
A	9	(NEW LOADS)	CONTINUOUS AMPS				SOLID NEUTRAL BUS
B	9	(NEW LOADS)	NON-CONTINUOUS				EQUIPMENT GROUND BUS
C	9	(NEW LOADS)	SUM				
	27	TOTAL (NEW LOADS)					

PANEL NOTES:

1. PROVIDE TYPE-WRITTEN PANEL SCHEDULE WITH EXISTING LOADS AND NEW LOADS.
2. PROVIDE SCREW FASTENED TYPE ENGRAVED LAMICOID NAMEPLATE FOR EXISTING PANELBOARD.
3. ELECTRICAL CONTRACTOR SHALL METER ALL EXISTING CIRCUITS AND PROVIDE AN UPDATE LOAD TABLE FOR (E) SIEMENS PANEL BOARD. ONLY LOAD CALCULATIONS FOR THE NEW ADDITIONAL LOADS ARE AS SHOWN ON SIEMENS PANEL BOARD SCHEDULE.
4. CONTRACTOR SHALL VERIFY THERE IS ENOUGH CAPACITY FOR NEW LOADS.

THIS DRAWING IS AND SHALL REMAIN THE PROPERTY OF GANNETT FLEMING, INC. ANY MISUSE, REUSE, ALTERATIONS, ADDITIONS, AND/OR DELETIONS OF THESE DRAWINGS ON PROJECT EXTENSIONS OR OTHER PROJECTS SHALL BE AT THE USER'S SOLE RISK AND WITHOUT LIABILITY TO GANNETT FLEMING, INC. IN THE EVENT THAT A CONFLICT ARISES BETWEEN THE SEALED DRAWINGS AND THE ELECTRONIC FILES, THE SEALED DRAWINGS WILL GOVERN.

CHARLES J GREW
LICENSED PROFESSIONAL ENGINEER
NO. 24GE05275300

2 EXECUTIVE DRIVE, SUITE 100
MARLTON, NEW JERSEY 08053
CERTIFICATE OF AUTHORIZATION NO. 24GA28032500

© GANNETT FLEMING, INC. 2022

No.	DESCRIPTION	DATE	BY

REVISIONS

DESIGNED	CADD	SCALE
RH	OM	AS NOTED
CHECKED	APPROVED	APPROVED
BAS	BAS	X.X.X

GANNETT FLEMING

HARRISBURG, PENNSYLVANIA

NORTH JERSEY DISTRICT WATER SUPPLY COMMISSION
WANAQUE, NEW JERSEY

FILTER REHAB

BID SET

ELECTRICAL
PANEL SCHEDULE

JOB No. 72743

DATE AUGUST 2023

SHEET No. E-06

FILE PATH: C:\Users\smith\ACCDocs\GANNETT FLEMING INC\072743-NJDWSC_Filter_Rehab\Project Files\Design\FAC\ELEC\Wkg\72743 E06.dwg
DATE SAVED: 2/17/2023 2:53 PM BY: rhartman DATE PLOTTED: 7/28/2023 12:17 PM

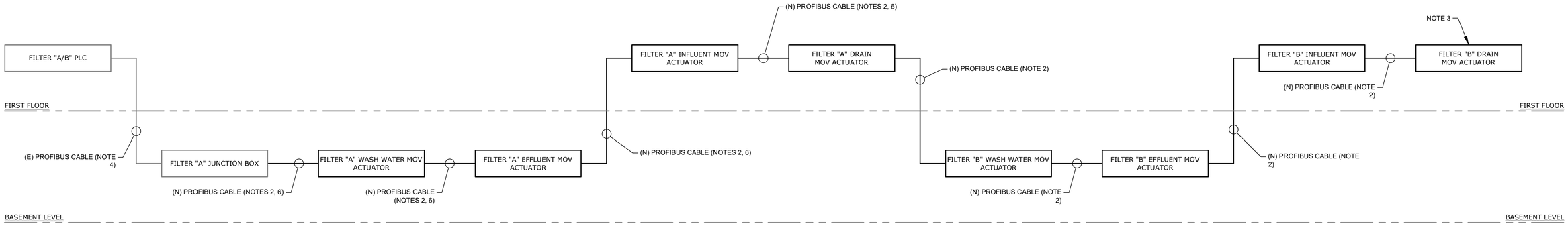

TYPICAL PROFIBUS DEVICE LOOP

NOTES:
1. TYPICAL FOR 5 FILTER PAIRS. SEE TABLE A.
2. PROFIBUS CABLE SHALL BE AS MANUFACTURED BY BELDEN OR APPROVED EQUAL.
3. ACTIVE TERMINATION CIRCUITS ARE REQUIRED TO BE CONNECTED FOR THE FINAL DEVICE IN EACH LOOP. REFER TO DETAIL 4 ON DRAWING E-08 AND ACTUATOR MANUAL FOR DETAILS.
4. EXISTING PROFIBUS CABLE HAS BEEN RUN FROM EACH PLC TO THE ASSOCIATED JUNCTION BOX FOR FILTER "A". CONTRACTOR SHALL EXTEND THE PROFIBUS LOOP FROM THIS POINT FOR EACH FILTER PAIR.
5. FILTER "A" JUNCTION BOX IS NOT A PROFIBUS DEVICE. IT IS SHOWN IN THE DIAGRAM TO REPRESENT WHERE THE DEVICE LOOP BEGINS.
6. FOR THE FILTER PAIR INCLUDING FILTERS 3 AND 4, THERE IS EXISTING PROFIBUS CABLE RUN TO ALL MOV ACTUATORS FOR FILTER 3 (FILTER "A" IN THE DIAGRAM ABOVE). THE CONTRACTOR SHALL EXTEND THIS PROFIBUS LOOP FROM THE FILTER 3 DRAIN MOV ACTUATOR TO ALL IN-SCOPE MOV ACTUATORS FOR FILTER 4, AS SHOWN IN THE DIAGRAM, AND REMOVE ANY TERMINATION RESISTORS AS REQUIRED.

TABLE A: FILTER PAIRS

LOOP No.	FILTER "A"	FILTER "B"
1	FILTER 1	FILTER 2
2	FILTER 3	FILTER 4
3	FILTER 5	FILTER 6
4	FILTER 7	FILTER 8
5	FILTER 9	FILTER 10

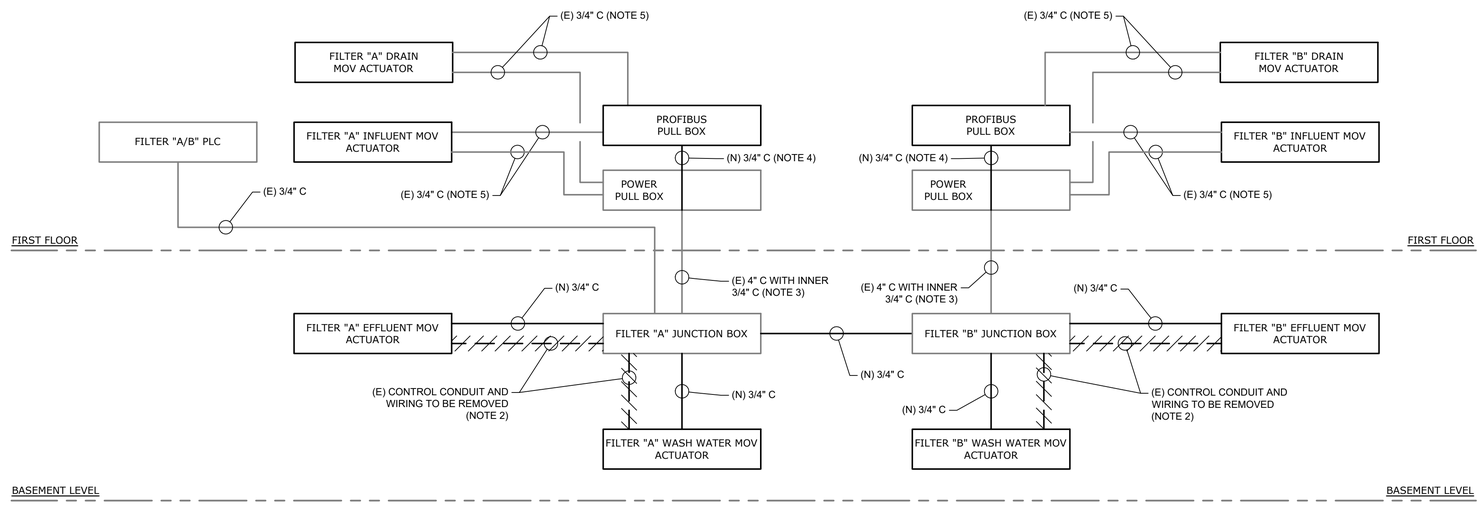

TYPICAL CONTROL CONDUIT SCHEMATIC

NOTES:
1. TYPICAL FOR 5 FILTER PAIRS. SEE TABLE A.
2. REMOVE EXISTING CONTROL CONDUIT BETWEEN FILTER JUNCTION BOXES AND ASSOCIATED EFFLUENT MOV ACTUATORS AND WASH WATER VALVE OPERATORS. REMOVE EXISTING CONTROL WIRING BACK TO SOURCE.
3. EXISTING 4" CONDUIT WITH INNER 3/4" CONDUIT TO REMAIN. REMOVE ALL EXISTING CONTROL WIRING INSIDE 3/4" C BACK TO SOURCE. PROFIBUS CABLE SHALL BE RUN IN THE INNER 3/4" C. POWER SHALL BE RUN INSIDE THE 4" C, BUT OUTSIDE OF THE INNER 3/4" C TO MAINTAIN REQUIRED SEPARATION.
4. EXTEND INNER 3/4" C THROUGH POWER PULL BOX TO A NEW NEMA 4X PULL BOX FOR PROFIBUS CABLE TO MAINTAIN REQUIRED SEPARATION OF POWER AND COMMUNICATION WIRING.
5. FOR EACH FILTER INFLUENT AND DRAIN MOV ACTUATOR, REMOVE THE EXISTING CONTROL WIRING FROM THE TWO 3/4" CONDUITS BACK TO SOURCE. ONE OF THE TWO EXISTING 3/4" CONDUITS SHALL BE REUSED FOR THE NEW PROFIBUS CONTROL WIRING; THE OTHER SHALL BE REUSED FOR THE POWER WIRING TO THE ACTUATOR. EXTEND EXISTING CONDUITS TO PULL BOXES AS REQUIRED.

LINETYPE LEGEND:

NEW EQUIPMENT / WORK

EXISTING EQUIPMENT / WORK OR WORK BY OTHERS

DEMOLITION

THIS DRAWING IS AND SHALL REMAIN THE PROPERTY OF GANNETT FLEMING, INC. ANY MISUSE, REUSE, ALTERATIONS, ADDITIONS, AND/OR DELETIONS OF THESE DRAWINGS ON PROJECT EXTENSIONS OR OTHER PROJECTS SHALL BE AT THE USER'S SOLE RISK AND WITHOUT LIABILITY TO GANNETT FLEMING, INC. IN THE EVENT THAT A CONFLICT ARISES BETWEEN THE SEALED DRAWINGS AND THE ELECTRONIC FILES, THE SEALED DRAWINGS WILL GOVERN.

CHARLES J GREW
LICENSED PROFESSIONAL ENGINEER
NO. 24GE05275300
2 EXECUTIVE DRIVE, SUITE 100
MARLTON, NEW JERSEY 08053
CERTIFICATE OF AUTHORIZATION NO. 24GA28032500

© GANNETT FLEMING, INC. 2022

No.	DESCRIPTION	DATE	BY

REVISIONS

DESIGNED	CADD	SCALE
TS	TS	AS NOTED
CHECKED	APPROVED	APPROVED
BAS	BAS	X.X.X

GANNETT FLEMING

HARRISBURG, PENNSYLVANIA

NORTH JERSEY DISTRICT WATER SUPPLY COMMISSION
WANAQUE, NEW JERSEY

FILTER REHAB

BID SET

ELECTRICAL
SCHEMATIC WIRING AND CONDUIT ROUTING DIAGRAMS

JOB No. 72743

DATE AUGUST 2023

SHEET No. E-07

FILE PATH: C:\Users\csmith\ACCDocs\GANNETT FLEMING INC\072743-NJDWSC_Filter_Rehab\Project Files\Design\FAC\ELEC\Wkg\72743 E07 Control Schematic.dwg
DATE SAVED: 2/17/2023 2:53 PM BY rhartman DATE PLOTTED: 7/28/2023 12:19 PM

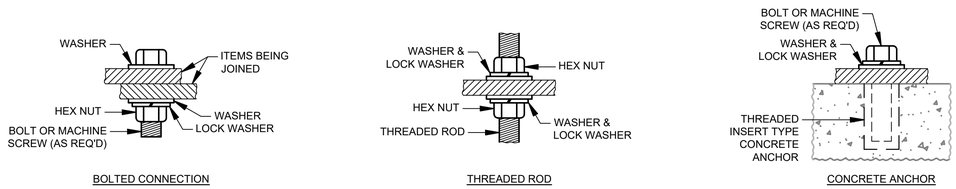

1 TYPICAL CONNECTIONS FOR MOUNTING ELECTRICAL EQUIPMENT, CONDUITS, ETC.

SCALE: NTS

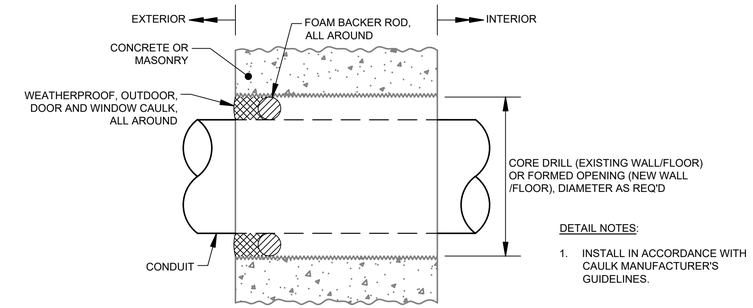

DETAIL NOTES:

1. INSTALL IN ACCORDANCE WITH CAULK MANUFACTURER'S GUIDELINES.

2 TYPICAL DETAIL - WALL / FLOOR PENETRATION WITH CAULK SEAL (NON-FIRE RATED)

SCALE: NTS

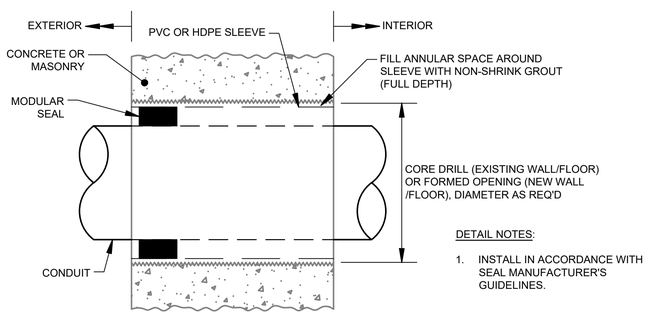

DETAIL NOTES:

1. INSTALL IN ACCORDANCE WITH SEAL MANUFACTURER'S GUIDELINES.

3 TYPICAL DETAIL - WALL / FLOOR PENETRATION WITH MODULAR SEAL

SCALE: NTS

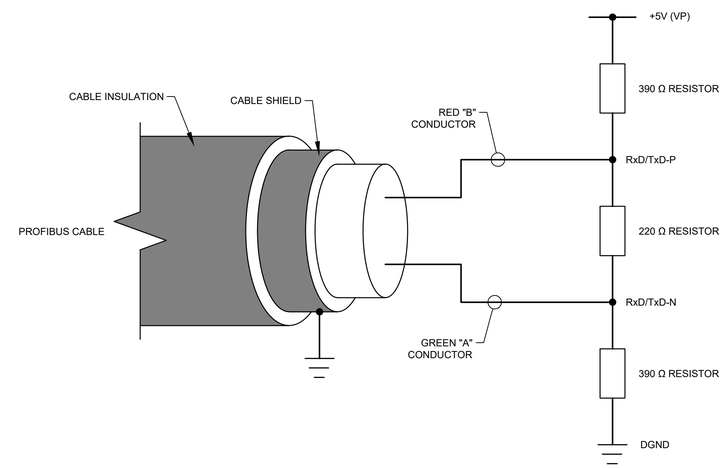

4 TYPICAL DETAIL - PROFIBUS ACTIVE TERMINATION CIRCUIT

SCALE: NTS

DETAIL NOTES:

1. ACTIVE TERMINATION CIRCUITS ARE REQUIRED TO BE CONNECTED FOR THE FINAL DEVICE IN EACH PROFIBUS LOOP.
2. THE PROFIBUS OPTION CARD FOR VALVE ACTUATORS MAY INCLUDE ALL NECESSARY COMPONENTS TO CONNECT THE ACTIVE TERMINATION CIRCUIT. REFER TO MANUFACTURER'S INSTALLATION AND OPERATING MANUAL.

THIS DRAWING IS AND SHALL REMAIN THE PROPERTY OF GANNETT FLEMING, INC. ANY MISUSE, REUSE, ALTERATIONS, ADDITIONS, AND/OR DELETIONS OF THESE DRAWINGS ON PROJECT EXTENSIONS OR OTHER PROJECTS SHALL BE AT THE USER'S SOLE RISK AND WITHOUT LIABILITY TO GANNETT FLEMING, INC. IN THE EVENT THAT A CONFLICT ARISES BETWEEN THE SEALED DRAWINGS AND THE ELECTRONIC FILES, THE SEALED DRAWINGS WILL GOVERN.

CHARLES J GREW
LICENSED PROFESSIONAL ENGINEER
NO. 24GE05275300
CERTIFICATE OF AUTHORIZATION NO. 24GA28032500
2 EXECUTIVE DRIVE, SUITE 100
MARLTON, NEW JERSEY 08053

© GANNETT FLEMING, INC. 2022

No.	DESCRIPTION	DATE	BY

REVISIONS

DESIGNED	CADD	SCALE
RH	OM	AS NOTED
CHECKED	APPROVED	APPROVED
BAS	BAS	X.X.X

GANNETT FLEMING

HARRISBURG, PENNSYLVANIA

NORTH JERSEY DISTRICT WATER SUPPLY COMMISSION
WANAQUE, NEW JERSEY

FILTER REHAB

BID SET

ELECTRICAL DETAILS

JOB No. 72743

DATE AUGUST 2023

SHEET No. E-08

FILE PATH: C:\Users\csmith\ACCDocs\GANNETT FLEMING INC\07243-NJDWSC_Filter_Rehab\Project Files\Design\FAC\ELEC\Wrkg\72743 E08 Details.dwg
DATE SAVED: 7/28/2023 12:04 PM BY: csmith DATE PLOTTED: 7/28/2023 12:21 PM

ATTACHMENT #1

ACCESS APPROVAL

Pages (1) One

ACCESS APPROVAL FORM TO COMMISSION FACILITIES

COMPLETE ALL SECTIONS

PLEASE PRINT LEGIBLY

1. Name of Individual Entering Premises: _____
   a. Company Name: _____
   b. Date of Arrival: _____
   c. Time of Arrival: _____
   d. Your Contact Info: Phone: _____ Fax:_____ Email:_____

2. **Purpose:**
   a. Meeting: ( ) Interview: ( ) Pre-bid/Pre-Proposal Meeting: ( ) Bid Opening: ( )
   Bid/RFP # & Title: _____
   Meeting Scheduled With: _____
   Visiting which Commission Facility: _____
   b. Delivery: ( ) Routine -or- ( ) Special
   Purpose of Delivery: _____
   Contact Person at NJDWSC: _____
   Type: Package: _____ Chemical:_____ Other: _____
   Hazardous Materials ( ) **(Attach MSDS Sheets)**
   Other Materials Delivered or Transported to Commission Property (List Below):
   _____
   _____

3. Vehicle Make: _____ Year: _____ Color: _____ Lic. Plate #: _____
4. Emergency Contact Number of Your Firm: Name: _____
   Tele #: _____

Email completed Access Approval Form & Photo ID to security@njdwsc.com *24 hours prior to arrival time*. For any questions, please call (973) 831-6200. A new Access Approval Form is required for each and every visit.

Approved by Commission: _____ Date:_____

Note: ***Prior to any and all contractors starting work on the property, they are to meet with a Safety Officer for site orientation and safety awareness training. This must be done for each employee and all sub-contractors.***

Revised: jv05-05

ATTACHMENT #2

CONFIDENTIALITY &
NON-DISCLOSURE AGREEMENT

Pages (5) Five

COMMISSIONERS

HOWARE L. BURRELL
CHAIRMAN
GLENWOOD, NJ

CHARLES P. SHOTMEYER
VICE CHAIRMAN
FRANKLIN LAKES, NJ

ALAN S. ASHKINAZE
ORADELL, NJ

DONALD C. KUSER
WAYNE, NJ

JAMES L. CASSELLA
EAST RUTHERFORD, NJ

CRISTINA M. CUTRONE
FAIR LAWN, NJ

TERRANCE J. DUFFY
WEST MILFORD, NJ

NORTH JERSEY DISTRICT WATER SUPPLY COMMISSION

ONE F.A. ORECHIO DRIVE
WANAQUE, NJ 07465
973-835-3600 FAX: 973-835-6701
E-Mail: commissionoutreach@njdwsc.com

TIMOTHY J. EUSTACE
EXECUTIVE DIRECTOR

WILLIAM SCHAFFNER
CHIEF FINANCIAL OFFICER

KIM DIAMOND
COMMISSION SECRETARY

CONFIDENTIALITY AND NONDISCLOSURE AGREEMENT

THIS CONFIDENTIALITY AND NONDISCLOSURE AGREEMENT (the "Agreement") is made and entered into as of this ____ day of _____, 2024 by and between:

THE NORTH JERSEY DISTRICT WATER SUPPLY COMMISSION (hereinafter, the "Commission"), located at One F.A. Orechio Drive, Wanaque, New Jersey 07465; and

_____, and its affiliates and subsidiaries (hereinafter, "_____"), with a primary place of business located at _____, _____and, together with the Commission, the "parties").

WITNESSETH

WHEREAS, pursuant to N.J.S.A. 58:5-1 et seq., the Commission is a public body corporate duly organized and existing under and by virtue of the laws of the State of New Jersey, exercising public and essential governmental functions and providing for the public health and welfare, and is engaged in developing raw water sources, storing water and distributing a reliable supply of potable water to its participating municipalities; and

WHEREAS, the Commission fulfills a vital role in maintaining, overseeing, and securing the operation of the largest regional water supply in the State of New Jersey, the safety and security of said operation constituting a critical Homeland Security concern; and

WHEREAS, in order to facilitate the possibility of entering into a contract for goods and services, and in particular, the procurement process pertaining to **CONTRACT #2127 FILTER REHABILITATION PROJECT** Commission-Owned Facilities, and if entered into, the execution of such business relationship, the Commission may disclose certain non-public or proprietary information to_____ (or the "Receiving Party") and its representatives; and

WHEREAS, the Commission wishes to preserve the confidentiality and prevent the unauthorized disclosure and use of any such non-public or proprietary information disclosed to the Receiving Party and its representatives.

NOW THEREFORE, in consideration of the mutual promises, covenants, representations and warranties made in this Agreement, the receipt and sufficiency of which are hereby acknowledged by the parties, intending to be legally bound, hereby agree as follows:

1. "Information" means all non-public or proprietary information of the Commission disclosed in connection with this Agreement and shall include, but not be limited to, information regarding the Commission or its related entities' assets, liabilities, financial and other conditions, insurance, reinsurance, employees, consultants, operations, facilities, prospects, business plans, customer lists, or security arrangements. Information also includes any documents prepared by the Receiving Party that through the use of non-public proprietary Information that was provided to the Receiving Party by the Commission.

2. As a condition to receiving the Information which the Commission may furnish to the Receiving Party and its representatives or to which the Receiving Party and its representatives are afforded access, directly or indirectly, the Receiving Party and its representatives shall take all reasonable measures to avoid disclosure, dissemination or unauthorized use of Information, including, at a minimum, those measures that the Receiving Party takes to protect its own confidential information of a similar nature (provided that such measures are consistent with at least a reasonable degree of care).

3. Information does not include information that:

    a. Has been or becomes published or is now or in the future publicly available without breach of this Agreement or breach of a similar agreement by a third party or through no wrongful act of the receiving party or its representatives; or

    b. Is known to the Receiving Party prior to the time such information was acquired from the Commission under this Agreement as evidenced by the Receiving Party's contemporaneous written records; or

    c. Is independently developed and prepared by the Receiving Party not in reliance upon or reflecting any Information disclosed pursuant to this Agreement; or

    d. Subsequent to disclosure, is lawfully received from a third party having rights therein without restriction (to the best of the Receiving Party's knowledge) on the right of such third party or the Receiving Party to disseminate the information and without notice of any restriction against its further disclosure.

4. Information shall not, without the prior written consent of the Commission, be disclosed to any person or entity other than the Receiving Party's and its representatives' employees (including outside legal counsel, actuaries and accountants) who need to know the Information and in those instances only to the extent of such need. The Receiving Party agrees to keep all Information confidential, and further agrees to use Information solely for the evaluation stated above, and for no other purpose. The Receiving Party agrees that it and its representatives' employees (including outside legal counsel, actuaries and accountants) shall be informed of the terms of this Agreement.

5. All Information shall remain the exclusive property of the Commission, and the Receiving Party shall have no rights, by license or otherwise, to use Information except as expressly provided herein.

6. The Receiving Party agrees on its own behalf and on behalf of its representatives and/or assigns to return to the Commission or destroy, and verify in writing such destruction, all written, tangible or otherwise accessible material in any form (including electronic media such as computer diskettes, CD-ROM, electronic copies or any material resident in the hard or external drive of any computer) containing or reflecting any Information (including all copies, summaries, excerpts, extracts, notes or other reproductions) promptly at the request of the Commission or within sixty (60) days of the termination or conclusion of the parties' business or contractual relationship. All information retained by the Receiving Party pursuant to this Section 6 shall remain subject to the confidentiality and nondisclosure obligations of this Agreement. Notwithstanding anything to the contrary in this Agreement, the Receiving Party may retain one copy of Information that has become part of a file that the Receiving Party, in its reasonable judgment, is required to retain and/or make available for examination by government regulatory or investigatory agencies, or retain and/or produce by an order of a court or insurance regulatory agency.

7. Nothing in this Agreement shall impose any obligation upon either party to consummate a transaction, to enter into any discussion or negotiations with respect thereto, or to take any other action not expressly agreed to herein.

8. In the event that the Receiving Party receives a request to disclose all or any part of the Information as part of a governmental investigation or under the terms of a subpoena or order issued by a court or governmental body, the Receiving Party will take all reasonable steps to notify the Commission promptly in writing of such request in order to allow the Commission an opportunity to resist or narrow such request and will reasonably cooperate, at the Commission's expense, with the Commission and its representatives in connection with the Commission's efforts to resist or narrow such request. In the event that the Commission elects to waive the provisions of this Section 8 or is otherwise unsuccessful in resisting such request, the Receiving Party shall only disclose the Information that it determines it is legally required to disclose after consultation with competent counsel.

9. Except as required by applicable law or court or arbitral order, neither party shall in any way or in any form disclose (except as necessary to such party's outside legal counsel, actuaries and accountants), publicize or advertise in any manner the discussions or negotiations concerning the business purpose underlying this Agreement, or the status of any such discussions or negotiations without the consent of the other party.

10. This Agreement shall be deemed to be a contract made under the laws of the State of New Jersey and for all purposes shall be construed in accordance with the laws thereof. The parties agree that any and all disputes between the parties under or relating to the terms and conditions of this Agreement shall be fully and completely adjudicated in the courts of the State of New Jersey.

11. Any provision of this Agreement which may be prohibited or unenforceable in any jurisdiction shall, as to such jurisdiction, be ineffective to the extent of such prohibition or unenforceability without invalidating the remaining provisions hereof or affecting the validity or enforceability of such provision in any other jurisdiction.

12. Neither this Agreement nor any rights or obligations hereunder may be assigned by either party hereto without the prior written consent of the other party, and such consent shall not be unreasonably withheld, delayed or conditioned. This Agreement shall inure to the benefit of and be binding upon the parties hereto and their respective successors and assigns. No permitted assignment shall relieve a party of its obligations hereunder with respect to Information disclosed prior to the assignment. Any assignment in violation of this Paragraph Thirteen (12) shall be deemed null and void.

13. No amendment to any provision of this Agreement shall be binding and enforceable unless in writing and signed by both of the parties and specifically referencing this Agreement.

14. This Agreement shall continue to be binding after the conclusion of the business or contractual relationship between the parties absent prior written consent of both parties.

15. This Agreement shall not be interpreted in a manner that would violate any applicable cannons of ethics or codes of professional responsibility. Nothing in this Agreement shall prohibit or interfere with the ability of counsel for any party to represent any individual, corporation, or other entity adverse to any party or its affiliate(s) in connection with any other matters.

16. Each of the parties acknowledges and agrees that remedies at law may be inadequate to protect the Commission against any actual or threatened breach of this Agreement by the Receiving Party or its representatives, and, without prejudice to any other rights and remedies otherwise available to the Commission (including, without limitation, monetary damages), the Receiving Party agrees to the granting of specific performance and injunctive or other equitable relief in the Commission's favor without proof of actual damages and each of the parties further agrees to waive, and to use all reasonable efforts to cause its representatives to waive, any requirement for the securing or posting of any bond in connection with any such remedy. Nothing in this Agreement shall be deemed or construed to limit or prevent the Commission from bringing a claim for damages as a result of any actual or threatened breach of this Agreement by the Receiving Party or its representatives.

17. Each of the parties agrees that no failure or delay by the Commission in exercising any right or remedy hereunder will operate as a waiver thereof, nor will any single or partial exercise thereof preclude any other or further exercise of any right or remedy hereunder.

18. This Agreement was entered into solely to benefit the parties and no other person or entity shall have enforceable rights and remedies hereunder or hereby.

19. This Agreement may be executed in one or more counterparts (including via facsimile), each of which shall be deemed an original but all of which together shall constitute one in the same instrument.

20. This Agreement sets forth the entire understanding between the parties concerning the subject matters of the foregoing recitals and paragraphs.

IN WITNESS HEREOF, the parties have caused this Agreement to be executed by their authorized representatives on the date first written.

(CONTRACTOR)	**NORTH JERSEY DISTRICT WATER SUPPLY COMMISSION**
By: _____	By: _____
Name: _____	Name: _____
Title: _____	Title: _____

ATTACHMENT #3

IRAN INVESTMENT ACTIVITIES

Pages (1) Three

STATE OF NEW JERSEY -- DIVISION OF PURCHASE AND PROPERTY
DISCLOSURE OF INVESTMENT ACTIVITIES IN IRAN

Quote Number: _____ **Bidder/Offeror:** _____

PART 1: CERTIFICATION
BIDDERS MUST COMPLETE PART 1 BY CHECKING EITHER BOX.
FAILURE TO CHECK ONE OF THE BOXES WILL RENDER THE PROPOSAL NON-RESPONSIVE.

Pursuant to Public Law 2012, c. 25, any person or entity that submits a bid or proposal or otherwise proposes to enter into or renew a contract must complete the certification below to attest, under penalty of perjury, that neither the person or entity, nor any of its parents, subsidiaries, or affiliates, is identified on the Department of Treasury's Chapter 25 list as a person or entity engaging in investment activities in Iran. The Chapter 25 list is found on the Division's website at http://www.state.nj.us/treasury/purchase/pdf/Chapter25List.pdf. Bidders **must** review this list prior to completing the below certification. **Failure to complete the certification will render a bidder's proposal non-responsive**. If the Director finds a person or entity to be in violation of law, s/he shall take action as may be appropriate and provided by law, rule or contract, including but not limited to, imposing sanctions, seeking compliance, recovering damages, declaring the party in default and seeking debarment or suspension of the party

PLEASE CHECK THE APPROPRIATE BOX:

☐ **I certify, pursuant to Public Law 2012, c. 25, that neither the bidder listed above nor any of the bidder's parents, subsidiaries, or affiliates is listed** on the N.J. Department of the Treasury''s list of entities determined to be engaged in prohibited activities in Iran pursuant to P.L. 2012, c. 25 ("Chapter 25 List"). I further certify that I am the person listed above, or I am an officer or representative of the entity listed above and am authorized to make this certification on its behalf. **I will skip Part 2 and sign and complete the Certification below.**

OR

☐ **I am unable to certify as above because the bidder and/or one or more of its parents, subsidiaries, or affiliates is listed on the Department's Chapter 25 list. I will provide a detailed, accurate and precise description of the activities in Part 2 below and sign and complete the Certification below**. Failure to provide such will result in the proposal being rendered as non-responsive and appropriate penalties, fines and/or sanctions will be assessed as provided by law.

PART 2: PLEASE PROVIDE FURTHER INFORMATION RELATED TO INVESTMENT ACTIVITIES IN IRAN
You must provide a detailed, accurate and precise description of the activities of the bidding person/entity, or one of its parents, subsidiaries or affiliates, engaging in the investment activities in Iran outlined above by completing the boxes below.

EACH BOX WILL PROMPT YOU TO PROVIDE INFORMATION RELATIVE TO THE ABOVE QUESTIONS. PLEASE PROVIDE THOROUGH ANSWERS TO EACH QUESTION. IF YOU NEED TO MAKE ADDITIONAL ENTRIES, CLICK THE "ADD AN ADDITIONAL ACTIVITIES ENTRY" BUTTON.

Name _____ Relationship to Bidder/Offeror _____

Description of Activities _____

_____

Duration of Engagement _____ Anticipated Cessation Date _____

Bidder/Offeror Contact Name _____ Contact Phone Number _____

ADD AN ADDITIONAL ACTIVITIES ENTRY

Certification: I, being duly sworn upon my oath, hereby represent and state that the foregoing information and any attachments thereto to the best of my knowledge are true and complete. I attest that I am authorized to execute this certification on behalf of the above-referenced person or entity. I acknowledge that the State of New Jersey is relying on the information contained herein and thereby acknowledge that I am under a continuing obligation from the date of this certification through the completion of any contracts with the State to notify the State in writing of any changes to the answers of information contained herein. I acknowledge that I am aware that it is a criminal offense to make a false statement or misrepresentation in this certification, and if I do so, I recognize that I am subject to criminal prosecution under the law and that it will also constitute a material breach of my agreement(s) with the State of New Jersey and that the State at its option may declare any contract(s) resulting from this certification void and unenforceable.

Full Name (Print): _____ Signature: _____

Title: _____ Date: _____

ATTACHMENT #4

Disabled Veteran-Owned Business Set-Aside Program

APPENDIX [__]

NORTH JERSEY DISTRICT WATER SUPPLY COMMISSION REQUIREMENTS FOR DISABLED VETERAN-OWNED BUSINESS SET-ASIDE PROGRAM

The following pages provide Bidders and Responders with information about the North Jersey District Water Supply Commission (the "Commission") Disabled Veteran-Owned Business ("DVOB") Set-Aside Program requirements for non-federally funded contracts and subcontracts. Clarification of the DVOB specifications, along with assistance in completing the required forms, can be obtained by calling the Compliance Manager at the Commission's Office of Equal Employment Opportunity (hereinafter "Office of EEO") at [_____].

CONTRACT CLAUSE

It is the policy of the Commission that DVOBs, as determined and defined by the State of New Jersey, Department of the Treasury, Division of Revenue and Enterprise Services ("Division") in N.J.A.C. 17:14-1.1 et seq., have the opportunity to compete for and participate in the performance of contracts and subcontracts for services in accordance with the New Jersey Set-Aside Act for Disabled Veteran's Businesses, N.J.S.A. 52:32-31.1 et seq. (P.L. 2015, c. 116). The Commission further requires that its contractors shall agree to take all necessary and responsible steps, in accordance with the aforementioned regulations, to ensure that DVOBs have these opportunities.

This language is included to ensure that all persons who enter into any form of contractual agreement with the Commission, are aware of their responsibilities and the commitment of the Commission to see that its Disabled Veteran-Owned Business Set-Aside Program ("Program") is carried out in all instances.

The Contractor agrees to make a good faith effort to award at least 3% of this Contract to Subcontractors registered by the Division as a DVOB firm. Subcontracting goals do not apply if the prime Contractor is a registered DVOB firm.

The following actions shall be taken by a bidder in establishing a good faith effort to solicit and award subcontracts to eligible disabled veteran-owned businesses, as established in the RFB or RFP:

1) The bidder shall attempt to locate qualified potential disabled veteran-owned business subcontractors;

2) The bidder shall consult the disabled veteran business database if none are known to the bidder;

3) The bidder shall keep a record of its efforts, including the names of businesses contacted and the means and results of such contacts, as well as documentation on any good faith efforts to solicit and award any subcontract to an eligible disabled veteran-owned business; and

4) The bidder shall provide all potential subcontractors with detailed information regarding the specifications.

Bidders and responders shall in all respects comply with the requirements of Appendix [__] governing the DVOB Program.

EXPLANATORY NOTE

The following information is provided by the Commission to prospective Bidders and Responders in an effort to promote and encourage participation in its Program for businesses registered with the Division as a DVOB. The information provided below is not a complete reproduction of the regulations governing DVOB registration and participation. Accordingly, to the extent that any of the information contained below conflicts with the applicable regulations, the regulations shall govern. Interested parties are encouraged to obtain a complete copy of the applicable

regulations (N.J.A.C. 17:14-1.1 et seq.) prior to registering with the Division and submitting bids or responses to the Commission.

I. Standards of eligibility for disabled veteran-owned businesses for goods and services and for construction contracts

See N.J.A.C. 17:14-2.1.

(a) In order to be eligible as a disabled veteran-owned business, a business must satisfy the following criteria:

1. The business must be independently owned and operated, as evidenced by its management being responsible for both its daily and long-term operation, and its management owning and controlling at least 51 percent interest in the business;

2. The business must be incorporated or registered to do business in the State and have its principal place of business in New Jersey; and

3. The business owner must have Federal certification from the Department of Veteran's Affairs as having a service-connected disability.

II. Obligation to provide information; penalties for failure to provide complete and accurate information (N.J.A.C. 17:14-2.2)

See N.J.A.C. 17:14-14-2.2

(a) Applicants under this chapter shall accurately and honestly supply all information required by the Division.

(b) When a business has been approved as a disabled veteran-owned business on the basis of false information knowingly supplied by the business, and the business has been awarded a contract, or a subcontract thereto, the Unit, after notice and opportunity for a contested case hearing pursuant to N.J.S.A. 52:14B-1 et seq., and 52:14F-1 et seq., and N.J.A.C. 1:1, shall:

1. Assess the business any difference between the contract amount and what the cost would have been if the contract had not been awarded in accordance with the provisions of N.J.S.A. 52:32-31 et seq.;

2. Assess the business a penalty in the amount of 10 percent of the amount of the contract or subcontract involved;

3. Order the business ineligible to transact any business with a contracting agency for a period between three months and one year; and

4. Order the Division to disallow the registration of the business as a disabled veteran-owned business for a period of one year from the State's database.

(c) Any business approved by the Division as a disabled veteran-owned business shall immediately apprise the Division of any circumstances that might affect the eligibility of the business under this chapter.

(d) The failure of a business to report any such changed circumstances, or the intentional and/or knowing reporting of false information, shall disqualify the business for inclusion in the database under this chapter for a period of one year.

(e) When a business has been registered as a disabled veteran-owned business on the basis of false information knowingly supplied by the business, but the business has not been awarded a contract, the Unit, after notice and opportunity for a contested case hearing pursuant to N.J.S.A. 52:14B-1 et seq., and 52:14F-1 et seq., and N.J.A.C. 1:1, shall order the Division to disallow the registration of the business as a disabled veteran-owned business from the State's database for a period of one year.

III. Registration procedures for disabled veteran-owned businesses

See N.J.A.C. 17:14-3.1.

(a) A business seeking to register as a disabled veteran-owned business shall comply with the following registration procedures:

1. The business shall register at www.newjerseybusiness.gov, for Premier Business Services; and

2. The business shall apply to the Division by completing the Vendor Registration Form, available online at www.nj.gov/njbgs.

i. As part of its application to the Division, a business shall document its principal place of business, independent status, number of employees, and its gross revenues. This documentation shall include all forms and reports requested by the Division on the Vendor Registration Form.

ii. If an applicant knowingly supplies inaccurate or false information, the application shall be denied under this chapter, the business shall be disqualified from inclusion in the disabled veteran-owned business database pursuant to N.J.A.C. 17:14-2.2, and the business may be subject to adverse action, including, but not limited to, debarment, suspension, or disqualification by contracting agencies, the Attorney General, or other enforcement agencies.

(b) When an application for registration as a disabled veteran-owned business has been completed, the Division shall determine whether to approve it and notify the business of its decision. If approved, the Division will issue the business a registration certification and add the business to the disabled veteran-owned business database.

(c) The disabled veteran-owned business database shall be used by contracting agencies to confirm eligibility of a business for set-aside contracts and subcontracts and in reporting progress toward established contract award goals.

(d) Every five years, no later than 20 days prior to expiration of the disabled veteran-owned business's registration, and not earlier than 60 days prior to the expiration of such registration, a business interested in remaining registered as a disabled veteran-owned business shall comply with the registration procedures under (a) above.

(e) Annually, the business shall submit, prior to the anniversary of the registration notice, a verification statement, in which it shall attest that there has been no change in the ownership, revenue eligibility, or control of the business at the State's website, www.nj.gov/njbgs.

i. If the business fails to submit the annual verification statement by the anniversary date of the registration notice, the registration will lapse and the business will be deemed revoked from the State's disabled veteran-owned business database. If the business seeks to be registered after revocation, it will have to reapply.

ii. If the business submits the annual verification statement by the anniversary date of the original registration notice, but either the verification statement or other information received by the Division indicates that the business is no longer eligible for registration as a disabled veteran-owned business, the Division shall revoke the registration pursuant to this chapter and following revocation, the business shall be deemed revoked from the State's disabled veteran-owned business database. The business may appeal this revocation pursuant to the procedures set forth at N.J.A.C. 17:14-3.4.

IV. Time for application to register as a disabled veteran-owned business

See N.J.A.C. 17:14-3.2.

(a) A business may apply to the Division at any time to be registered as a disabled veteran-owned business and to be placed on the disabled veteran-owned business database.

(b) If a business is to be eligible to bid on a specific set-aside contract or participate in the subcontracting goal programs for purposes of this chapter, it must be validly registered as a disabled veteran-owned business by the Division on or before the date the bid or proposal is due.

V. Procedures for challenging a business registered as a disabled veteran-owned business

See N.J.A.C. 17:14-3.3.

(a) The qualification under this chapter of a business as a disabled veteran-owned business may be challenged by any third-party.

1. A registration challenge shall be made in writing to the Unit, setting forth the factual basis for the challenge. The Unit shall provide a copy of the challenge and a notice granting the opportunity for a hearing to the challenged business. Where a particular contract is at issue, the Unit shall also provide a copy of the challenge to the contracting agency.

2. A registration challenge to the Unit may concern only the qualification of the business under this chapter as a disabled veteran-owned business. Any challenge to a business's qualifications to perform a contract shall be referred to the appropriate contracting agency.

(b) When the Unit receives a registration challenge, upon request of the business whose registration is at issue, the Unit Manager or a designee shall conduct a hearing on the matter as follows:

1. The Unit shall notify all interested parties (including, but not limited to, the challenging party, the business whose registration is at issue, and any affected contracting agency) of the time and place of the hearing, and of the right to attend and be represented at the hearing.

2. The burden of proof lies with the challenger to establish that the business whose registration is at issue is not qualified and/or not properly registered as a disabled veteran-owned small business under this chapter. However, the Unit may use its own resources to ascertain the validity of a challenge and the status of a business.

3. The hearing will be conducted by the Unit Manager or his or her designee. The Unit Manager will issue a written report within seven working days following the close of the hearing.

4. At the discretion of the Unit Manager or his or her designee, participants at the hearing may be permitted to file written exceptions to the report no later than five working days after the date on which the report is made available to the business.

5. If no exceptions are filed, or permitted to be filed, under (b)4 above, the decision shall be final. If exceptions are filed under (b)4 above, after reviewing the exceptions, the Unit Manager will issue a final decision on the challenge and notify the parties by letter.

6. A challenge to a business's eligibility shall not stay the contract award process.

VI. Procedures for denial, non-conferral, or revocation of registration as a disabled veteran-owned business

See N.J.A.C. 17:14-3.4.

(a) If the Division chooses to not confer or deny an application for a disabled veteran-owned business registration, or revokes a registration as a disabled veteran-owned business, the Division shall so notify the business. The denial or revocation is effective as of the date of the Division's notice to the business of its denial or revocation determination.

(b) When a business has been denied registration or has had its registration revoked, the business has the right to an appeal. The appeal procedures in this section govern denials and revocations, except for revocations on the basis of false information knowingly supplied by the business or failure to submit the annual verification statement. Revocation based on false information knowingly supplied by the business is addressed by the procedures at N.J.A.C. 17:14-2.2.

(c) Within 10 days from receipt of the denial or revocation notification, the business that received the notification may request, in writing to the Unit, an appeal hearing. The appeal may concern only the qualification of the business under this chapter as a disabled veteran-owned business. When the Division receives an appeal, it shall conduct a hearing on the matter as follows:

1. The Unit shall notify the business of the time and place of the hearing and of the right of the business to appear and be represented by counsel at the hearing.

2. The appeal request shall include all information, including any relevant documents, available to the appealing business relevant to the appeal.

3. The burden of proof lies with the appealing business to show that the denial or revocation of the business registration was in error, and that the appealing business meets all of the requisite qualifications under this chapter to be registered as a disabled veteran-owned business.

4. `The hearing will be conducted by the Unit Manager or a designee. The Unit Manager shall issue a written report within seven days of the close of the hearing.

5. At the discretion of the Unit Manager or his or her designee, the business may be permitted to file written exceptions to the report no later than five working days after the date on which the report is made available to the business.

6. If no exceptions are filed, or permitted to be filed, under (c)5 above, the decision shall be final. If exceptions are filed under (c)5 above, after reviewing the exceptions, the Unit Manager shall issue a decision on the appeal and notify the business by facsimile (or other electronic means) and letter.

VII. Subcontracting goal program and procedures

See N.J.A.C. 17:14-4.2.

(a) When deemed appropriate, any contracting agency, consistent with its contracting authority, may establish and administer a subcontracting goal program in lieu of, or as a supplement to, the set-aside program.

(b) Each contracting agency shall maintain records regarding subcontracts awarded pursuant to this program. The procedures shall include the following provisions:

1. The contracting agency shall review its schedule of contracting opportunities, and establish a method of determining which upcoming contracts are suitable for the subcontracting goal program.

i. Factors to be considered when making the determination that a particular contract is suitable for inclusion in this program include, but are not limited to: the minimum number of contractors assigned to a commodity code, the total dollar amount of the Project and subcontracting opportunities on the Project, and the number of available eligible businesses in geographical proximity to the Project site.

ii. The designation of a particular RFB or RFP as a disabled veteran-owned business set-aside subcontracting opportunity shall be made prior to the public advertisement.

(c) For construction contracts, the contracting agency shall review the Project to determine whether the disabled veteran-owned business set-aside goals are appropriate, or can be reasonably attained given the elements of the job. The contracting agency may review the Division's list of classified contractors to determine the number of eligible businesses, as established at N.J.A.C. 17:14-2.1, that may reasonably be expected to participate in the Project, giving consideration to the geographic location, required trades, and estimated dollar value of the Project.

1. The disabled veteran-owned business enterprise goal for construction projects set-aside can be reached either at the prime or subcontractor level.

2. The public advertisement shall include a notice to prospective bidders disclosing the disabled veteran-owned business goal for the contract.
3. Bidders shall provide sufficient documentation of its good faith efforts to meet the set-aside goal either with its bid, or within 10 days of a request by the contracting agency. Failure to comply may preclude award of a contract to a bidder.

(d) Each bidder awarded a contract for a procurement that contains the set-aside subcontracting goal requirement, shall fully cooperate in any studies or surveys that may be conducted by the contracting agency to determine the extent of the bidder's compliance with this chapter.

VIII. Good faith efforts of bidders; requirements

See N.J.A.C. 17:14-4.3.

(a) The following actions shall be taken by a bidder in establishing a good faith effort to solicit and award subcontracts to eligible disabled veteran-owned businesses, as established in the RFB or RFP:

1. The bidder shall attempt to locate qualified potential disabled veteran-owned business subcontractors;

2. The bidder shall consult the disabled veteran business database if none are known to the bidder;

3. The bidder or responder shall keep a record of its efforts, including the names of businesses contacted and the means and results of such contacts, as well as documentation on any good faith efforts to solicit and award any subcontract to an eligible disabled veteran-owned business; and

4. The bidder or responder shall provide all potential subcontractors with detailed information regarding the specifications.

IX. Exemptions from set-aside program

See N.J.A.C. 17:14-4.4.

In those circumstances where federal law, rules, or regulations permit or require a procurement procedure other than those prescribed in this chapter, the contracting agency shall follow the federal procedures notwithstanding the provisions of this chapter, provided that the contracting agency issues a written declaration that such federal laws, rules, or regulations are in effect.

X. Good faith efforts of Contractor

(a) The Commission requires that SBE/DVOB Forms A, B, C and D, as applicable, which are located on the Commission website, be submitted within seven (7) days after Notice of Award. However, the Commission may extend the deadline for this requirement at its sole discretion.

(b) If the Contractor submits the SBE/DVOB forms within the requested timeframe, but fails to meet the DVOB goal, a fully completed and notarized SBE/DVOB Form D must be submitted, and the Commission will evaluate the efforts made by the Contractor to determine whether a demonstration of good faith efforts has been made.

XI. Post-Award Obligations

(a) General Instructions:

1. Refer to the Commission's SBE/DVOB Participation Schedule ("Form A"). The listing of a DVOB firm by a Contractor on Form A shall constitute a representation by the Contractor to the Commission that such DVOB firm is qualified and not unavailable, and a commitment by the Contractor that it will enter into a subcontract with such DVOB firm for the portion of the work described in Form A and at the price set forth in its Bid or Response. A DVOB Contractor which lists itself on Form A is committed to performing the work indicated with its own personnel.

2. A database of DVOBs is maintained by the State, accessible via a link on the Division's webpage at https://www20.state.nj.us/TYTR_SAVI/vendorSearch.jsp; the database lists vendors by designation, including DVOBs, and is available for use by contracting agencies and others in confirming eligibility for set-aside contracts and subcontracts and in reporting progress toward established contract award goals. Use of this listing does not relieve the Contractor of its responsibility to seek DVOB participation from other sources.

3. Whenever the Commission issues Project Change Orders, the Commission may determine if increased DVOB participation will be required.

4. If at any time the Contractor believes or has reason to believe that a proposed DVOB has become unavailable or, due to change in ownership or management responsibility, does not meet the standards set forth in Article II, the Contractor shall, within 10 days, notify the Commission of that fact. Within 15 days thereafter, the Contractor shall, if necessary to achieve the stated goal, make every reasonable effort to subcontract the same or other work to other DVOB firms.

5. Should a DVOB become ineligible during the course of this Contract, effective as of the date of ineligibility, further contractual dollars expended with the DVOB shall not be counted toward the DVOB goal. Within 15 days after notification by the Commission to the Contractor of the ineligible DVOB, the Contractor shall make every reasonable effort to satisfy the DVOB goal. The Contractor's effort to continue to meet the DVOB goal shall be coordinated with the Office of EEO.

6. To ensure that all obligations under subcontracts awarded to DVOBs are met, the Commission shall review the prime Contractor's DVOB involvement efforts during the performance of the contract. The Contractor shall monitor the performance of and collect and report data on DVOB participation to the Office of EEO. The form will be reviewed to determine Contract compliance with respect to the DVOB goal. Failure to submit this report may result in suspension of payments as provided in the section titled "Audit and Penalties" below. If, at any time, the Commission has reason to believe that any person or firm has willfully and knowingly provided incorrect information or made false statements, it shall refer the matter to the Attorney General of the State of New Jersey.

7. The Contractor agrees to pay each subcontractor and supplier for satisfactory performance of its subcontract no later than ten (10) days from the receipt of each payment the Contractor receives from the Commission.

8. In accordance with N.J.S.A. 52:32-41:
   a. Prior to the issuance of a progress payment by an agency to a prime Contractor, the prime Contractor shall certify to the State agency that a subcontractor or supplier has been paid any amount due from any previous progress payment and shall be paid any amount due from the current progress payment, or that there exists a valid basis under the terms of the subcontractor's or supplier's contract to withhold payment from the subcontractor or supplier and therefore payment is withheld.
   b. If the prime Contractor withholds payment from a subcontractor or supplier, the prime Contractor shall provide to the subcontractor or supplier written notice of a withholding of payment. The notice shall detail the reason for withholding payment and state the amount of payment withheld. A copy of the notice shall be provided to the bonding company providing the performance bond for the general Contractor, and to the contracting agency.
   c. In addition to any amount due, a subcontractor or supplier shall also receive from a prime Contractor interest on the amount due at a rate equal to the prime rate plus 1% if a subcontractor or supplier is not paid within 10 calendar days after receipt by the prime Contractor of payment by a contracting agency for completed work which is the subject of a subcontract or a material supply agreement and if no valid basis exists for withholding payment. This interest shall begin to accrue on the 10th calendar day after receipt of payment by the prime Contractor. In addition, a subcontractor or supplier shall receive any court costs incurred by the subcontractor or supplier to collect payments withheld without a

valid basis by the prime Contractor.

d. If court action is taken by a subcontractor or supplier to collect payments withheld by a prime Contractor and it is determined that a valid basis existed for the withholding of those payments, the subcontractor or supplier shall be liable for any court costs incurred by the prime Contractor in connection with the action.

(b) Substitution of DVOBs

Except as provided herein, the Contractor shall not have the work performed, or the materials or supplies furnished, by any other DVOB firm other than those named in Form A. However, the Contractor may, in unusual situations, be permitted to substitute a subcontractor(s). A request for substitution must be in writing, with complete justification for the request. The Contractor must have approval of the Commission before substitution of the DVOB subcontractor, regardless of the reason for the substitution. Failure to obtain approval from the Commission could result in the prime Contractor being found to be in "noncompliance" with the requirements of the contract. The term "unusual situations" includes, but is not limited to, a DVOB subcontractor's or DVOB joint venture partners:

1. Failure to qualify as a DVOB or maintain DVOB registration status.
2. Death or physical disability, if the named subcontractor or DVOB partner of the joint venture is an individual.
3. Dissolution, if a corporation or partnership.
4. Bankruptcy of the subcontractor, subject to applicable bankruptcy laws, and only in instances where the bankruptcy affects the subcontractor's ability to perform.
5. Inability to obtain, or loss of, a license necessary for the performance of the particular category of work.
6. Failure or inability to comply with a requirement of law applicable to the subcontract work.
7. Material failure to comply with the terms and conditions of the subcontract.
8. Material failure to successfully perform the subcontract tasks.

XII. Audit and Penalties

The Contractor is advised that failure to carry out the requirements of these specifications shall constitute a breach of contract and may result in termination of the contract by the Commission, or such remedy as the Commission deems appropriate. During the performance of the contract, and for a period of up to three (3) years following completion of the contract work, the Commission may conduct reviews for compliance with the requirements of the DVOB Program. Such reviews may include the evaluation of monthly reports, desk audits and site visitations. Where a prime Contractor, or any Subcontractor, is found to be in noncompliance with the requirements of the DVOB Program during the performance of the contract, it will be required to take corrective action. If corrective action is not promptly taken by the offending Contractor, the following sanctions may be instituted (singularly, in any combination and in addition to any other remedies provided by law):

1. The Commission may withhold further payments under the Contract.
2. The Contract may be terminated for breach.
3. Suspension or debarment proceedings may be commenced in accordance with New Jersey law and the Commission regulations.
4. The Contract Bond may be enforced.

XIII. The Commission Program: Post-Award Submittals

Copies of the following forms are located on the Commission website*:*

(a) Form A: SBE/DVOB Participation Schedule
List all DVOB firms scheduled to participate in the contract, including scope of work to be performed and the dollar value of their anticipated participation. Additionally, the name of the Contractor's DVOB liaison officer should be included on this form. Upon execution of a contract with the Commission, the prime Contractor must enter into a formal agreement with the DVOB(s) listed on Form A. There can be no substitution of the DVOB(s) listed on Form A without the prior written approval of the Commission. If, for any reason Form A is not completed, then the Contractor must complete and provide Form D (see below).

(b) Form B: Intent to Perform as a Subcontractor (If applicable)
For each SBE or DVOB owned firm listed on Form A, Contractor shall include a complete and signed Form B. This Form B is not required for set aside contract awards, nor in cases wherein the Contractor is an SBE/DVOB itself.

(c) Form C: Affidavit of SBE/DVOB
Each SBE or DVOB firm to be utilized must sign Form C attesting to its validity as a SBE or DVOB.

(d) Form D: SBE/DVOB Unavailability Certification (if applicable)
If the Contractor is unable to identify SBE(s) or DVOB(s) as required to meet the targeted goal set for this Contract, the Contractor shall complete and attach this form which documents the Contractor's good faith efforts to do so.

(e) Form E: SBE/DVOB Certificate of Participation
This is the payment report that must be completed on a monthly basis by the Contractor, unless the Contractor is a DVOB itself.

(f) Form F: SBE/DVOB Certificate of Participation (Prime is SBE/DVOB)
If the Contractor is a SBE or DVOB itself, the Contractor shall complete this form and attach it with every Pay Estimate.

XIV. Definitions (N.J.A.C. 17:14-1.2)

The following words and terms, when used in this chapter, shall have the following meanings, unless the context clearly indicates otherwise.

"Bidder" means any individual or business entity submitting a proposal, quotation, or other offer to do business with the State of New Jersey [or any political subdivision thereof, including the Commission] in response to an invitation for bids.

"Bidding threshold" means the dollar limit placed on all public contracting agencies pursuant to N.J.S.A. 52:34-7 or 52:25-23 to establish when public advertisement of bids is required.

"Construction contract" means any contract to which the State or any other contracting agency is a party involving any construction, renovation, reconstruction, rehabilitation, alteration, conversion, extension, or demolition of or repair or other changes or improvements of any kind whatsoever to any public structure or facility. The term also includes contracts for consultant services, supervision, inspection, and other functions incidental to actual construction.

"Consultant" means an architect, engineer, construction manager, or other provider of technical and professional services.

"Contractor" means any party awarded a contract or agreement to provide goods and services or design and/or construction services.

"Delegated purchasing authority" means the authority to award contracts below the bid threshold amount pursuant to authority delegated by the Director, Division of Purchase and Property (See N.J.S.A. 52:25-23) or for design and construction contracts pursuant to the authority delegated by the Director, Division of Property Management and Construction (see N.J.S.A. 52:34-7).

"Department" means the Department of the Treasury.

"Director" means the head of the Division of Revenue and Enterprise Services in the Department of the Treasury.

"Disabled veteran-owned business" means a business that has its principal place of business in the State, is independently owned and operated, and at least 51 percent of which is owned and controlled by persons who are disabled veterans or a business that has its principal place of business in this State and has been officially verified by the United States Department of Veterans' Affairs as a service disabled veteran-owned business for the purposes of federal department contracts pursuant to federal law.

"Disabled veteran business database" means the State database that is accessible via a link on the Division's webpage at www.nj.gov/njbgs; the database lists disabled veteran-owned businesses and is available for use by contracting agencies and others in confirming eligibility for set-aside contracts and subcontracts and in reporting progress toward established contract award goals.

"Disabled veteran-owned business set-aside unit" or "Unit" means the section in the Department of the Treasury that provides oversight and direction for the disabled veteran-owned business set-aside program for the State of New Jersey.

"Division of Property Management and Construction" or "DPMC" means the division within the Department of the Treasury that provides a centralized design and construction contract procurement and administration service for other State agencies pursuant to N.J.S.A. 52:18A-151 et seq.

"Division of Purchase and Property" means the division within the Department of the Treasury that provides centralized procurement of goods and services for Executive Branch State agencies pursuant to N.J.S.A. 52:27B-56.

"Division of Revenue and Enterprise Services" or "Division" means the division in the Department of the Treasury that administers the registration of disabled veteran-owned business enterprises.

"Goal" means the statutorily determined percentage of contracting dollars awarded by each contracting agency to disabled veteran-owned businesses in order to comply with the statutory set-aside provisions. It includes the percentage of contracting dollars that the contracting agency makes a good faith effort to award to disabled veteran-owned businesses.

"Request for Bids" or "RFB" means the document issued by a contracting agency to initiate an advertised bidding and contract award process, and includes Requests for Proposals (RFPs). The RFB establishes the contract's terms and conditions, the product and/or service specifications, and the bidding eligibility to businesses approved as disabled veteran-owned business entities.

"Premier Business Services" means online business services provided via the State's business portal at www.nj.gov/njbusiness/home/pbs/, which include tax filing and payment services for which a business must register as part of its disabled veteran-owned business application.

"Principal place of business" means the location where 51 percent or more of a business' employees work, as evidenced by the payment of unemployment taxes, or the location where 51 percent or more of business operations occur, as supported by income or business tax returns.

"Registration" means the process by which any disabled veteran-owned business can have its eligibility for participation in the Department's disabled veteran-owned business programs determined.

"Request for Proposals" or "RFP" means the document issued by a contracting agency to initiate an advertised bidding proposal and contract award process.

"Set-Aside Act" means the New Jersey Set-Aside Act for Disabled Veteran's Businesses, N.J.S.A. 52:32-31.1 et seq. (P.L. 2015, c. 116).

"Set-aside contract," for the purposes of construing and applying the rules in this chapter only, means a contract,

specifically designated by a contracting agency, in whole or in part, for award to a disabled veteran-owned business, which may include a component allowing the use of subcontractors to satisfy the requirements of a set-aside.

"State contracting agency" or a "contracting agency" means any board, commission, committee, authority, division, department, college, or university of the State, or any other political subdivision thereof, that possesses the legal authority to enter into or award contracts for goods and services or design and construction contracts.

"Subcontractor" means a third-party that is engaged by a Contractor to perform all or part of the goods, services, or construction services included in a contract.

"Term contract" means an award made by a contracting agency, in which a source of supply for a product or service is established for a specific period of time. A term contract is generally applied when a contracting agency:

1. Establishes a fixed unit price, hourly rate, or discount for items or services to be purchased thereunder;

2. Provides for some estimated dollar volume or minimum quantities to be purchased; or

3. Provides for the rebidding of any single purchase that exceeds a specified maximum amount.

"Treasurer" means the Treasurer of the State of New Jersey or his or her designee.

"Vendor Registration Form" means the form available via a link on the Division's website at www.nj.gov/njbgs, that a business completes when applying to register as a disabled veteran-owned business under this chapter.

"Veteran" means any citizen and resident of this State honorably discharged, or released under honorable circumstances, who served in any branch of the Armed Forces of the United States, or a Reserve component thereof, for at least 90 days and shall include disabled veterans.

NORTH JERSEY DISTRICT WATER SUPPLY COMMISSION
SMALL BUSINESS ENTERPRISE ("SBE") PROGRAM AND
DISABLED VETERAN-OWNED BUSINESS ("DVOB") SET-ASIDE PROGRAM
FORM A*
SBE/DVOB PARTICIPATION SCHEDULE

Bid Solicitation Number: _____ Project Title: _____

SBE GOAL%_____ DVOB GOAL% _____

NAME AND ADDRESS OF SBE 1, 2, 3, 4 and/or 5, 6 or DVOB SUBCONTRACTOR	SBE 1	SBE 2	SBE 3	SBE 4	SBE 5	SBE 6	DVOB	** MBE	** WBE	TYPE OF WORK TO BE PERFORMED	DOLLAR AMOUNT OF SUBCONTRACTOR WORK***	SUB-CONTRACT %

The undersigned will enter into a formal agreement with the SBE(s)/DVOB(s) listed in this schedule conditioned upon execution of a contract with the Commission for the above referenced project.

Authorized Signature: _____Name of Company: _____

Print Name: _____ Title_____ Prime Contractor's Liaison Officer: _____

Company Phone # _____ Company Address:_____

This form MUST be completed and submitted within seven (7) days after Notice of Award.

SBE Prime or DVOB Prime Contractors need only to complete this form for their firm.

* In the event Form A cannot be completed, or if the percentage of the goal for the contract is not met, Form D must be completed.

** The provision of this information is voluntary and will not be considered in determining the successful bid or in calculating SBE or DVOB participation.

*** Eliminate Price in Professional Service Contracts Only.

NORTH JERSEY DISTRICT WATER SUPPLY COMMISSION
SMALL BUSINESS ENTERPRISE ("SBE") PROGRAM AND
DISABLED VETERAN-OWNED BUSINESS ("DVOB") SET-ASIDE PROGRAM
FORM B
INTENT TO PERFORM AS A SUBCONTRACTOR

TO: _____ BID SOLICITATION NUMBER: _____

(Name of Prime Contractor)

PROJECT TITLE: _____

The undersigned intends to perform subcontract work in connection with the above-mentioned project as (Check One):

___ Individual ___ Corporation ___ Partnership ___ Joint Venture ___ L.L.C. ___ Other

The SBE or DVOB Category status of the undersigned is confirmed on the attached Affidavit of SBE or DVOB (SBE-DVOB Form C).

The undersigned is prepared to perform the following described work in connection with the above-referenced project:

_____

_____

_____

and at the following price: _____

NOTE: Eliminate Price on Professional Service Contracts Only.

The Prime Contractor has projected the following commencement date for such work, and the undersigned projects completion of such work as follows:

_____Project Commencement Date _____ Projected Completion Date

With respect to the proposed subcontract described above, ____% of the dollar value of such subcontract will be subcontracted and/or awarded to Non-SBE Contractors and/or Non-SBE Suppliers and/or Non-DVOB Contractors and/or Non-DVOB Suppliers.

The undersigned will enter into a formal agreement for the above work with the Prime Contractor conditioned upon execution of a contract with the Commission. As a SBE or DVOB Subcontractor, I will cooperate with the certification and monitoring process set forth by the Commission for the referenced project.

_____	_____
Signature of SBE or DVOB Date	Name of SBE or DVOB Firm
_____	_____
Type Name	Address
_____	_____
Type Title	Telephone Number/Email

NORTH JERSEY DISTRICT WATER SUPPLY COMMISSION
SMALL BUSINESS ENTERPRISE ("SBE") PROGRAM AND
DISABLED VETERAN-OWNED ("DVOB") SET-ASIDE PROGRAM
FORM C
AFFIDAVIT OF SBE/DVOB

Bid Solicitation Number: _____Project Title:_____

I, _____ (Name) HEREBY DECLARE AND AFFIRM that I am the

_____ **(Title)** and duly authorized representative of the firm of

_____ (Firm) located in the State of _____ .

Bidder acknowledges and affirms that he/she is registered and approved in good standing with the State of New Jersey, Department of the Treasury, Division of Minority & Women Business Development ("Division") as an SBE or DVOB and has been placed on the Division's small vendor list. This status must be achieved on or before the date the bids are received and opened.

*****ATTACHED IS A COPY OF OUR SBE OR DVOB REGISTRATION CERTIFICATE.*****

I DO SOLEMNLY DECLARE AND AFFIRM UNDER THE PENALTIES OF PERJURY THAT THE CONTENTS OF THE FOREGOING DOCUMENT ARE TRUE AND CORRECT, AND THAT I AM AUTHORIZED, ON BEHALF OF THE ABOVE FIRM, TO MAKE THIS AFFIDAVIT.

Signature: Date:

_____ _____

On this _____ day of_____, 20__, before me _____(Name of Notary Public), the person described in the foregoing Affidavit acknowledged that he/she executed the same in the capacity therein stated and for the purposes therein contained.

In Witness whereof, I hereunto set my official seal.

_____
Notary Public (Seal)

My Commission Expires: _____

NORTH JERSEY DISTRICT WATER SUPPLY COMMISSION
SMALL BUSINESS ENTERPRISE ("SBE") PROGRAM
AND DISABLED VETERAN-OWNED ("DVOB") SET-ASIDE PROGRAM
FORM D
SBE/DVOB UNAVAILABILITY CERTIFICATION

Contract Number: _____Project Title:_____

I, _____(Name), _____ (Title),

of_____ (Prime Contractor)

located in the STATE OF_____

certify that on _____ (Date), I contacted the following SBE(s) and DVOB(s) to obtain a Bid for work items to be performed on the Project named above.

To the best of knowledge and belief, each SBE or DVOB identified in this form was unavailable for work on this project, exclusive of unavailability due to lack of agreement on price, and each SBE or DVOB was unable to prepare a bid for the following reason(s) (if known):

SBE or DVOB Firm Name	SBE Category No. or Construction Code or Commodity Code	DVOB Registration No.	Type of Work
Reason Unavailable:			
DVOB Firm Name	SBE Category No. or Construction Code or Commodity Code	DVOB Registration No.	Type of Work
Reason Unavailable:			

(additional pages are attached as necessary)

This form MUST be completed and submitted within seven (7) days after Notice of Award.

Signature: Date:

_____ _____

On this _____ day of_____, 20__, before me _____(Name of Notary Public), the person described in the foregoing Affidavit acknowledged that he/she executed the same in the capacity therein stated and for the purposes therein contained.

In Witness whereof, I hereunto set my official seal.

_____
Notary Public (Seal)

My Commission Expires: _____

NORTH JERSEY DISTRICT WATER SUPPLY COMMISSION
SMALL BUSINESS ENTERPRISE ("SBE") PROGRAM AND
DISABLED VETERAN-OWNED BUSINESS ("DVOB") SET-ASIDE PROGRAM
FORM E
SBE/DVOB CERTIFICATE OF PARTICIPATION

Bid Solicitation Number: _____ Estimate Number _____ (Note if Final) Period Ending

NAME & ADDRESS OF SBE OR DVOB SUBCONTRACTOR	PAY ITEM & DESCRIPTION OR PARTS THEREOF, OF WORK PERFORMED	DATES OF COMMENCEMENT & ESTIMATED COMPLETION	ACTUAL AMOUNT PAID THIS PERIOD	TOTAL AMOUNT PAID TO DATE	ESTIMATED AMOUNT TO BE PAID AT END OF CONTRACT	M/WBE (optional)
			$	$	$	
			$	$	$	
			$	$	$	
			$	$	$	
			$	$	$	
			$	$	$	

CERTIFICATES FOR PAYMENTS SUBMITTED WITHOUT THE COMPLETED SBE-DVOB FORM E WILL NOT BE PROCESSED.

IN WITNESS WHEREOF the undersigned has hereunto set its

Hand and seal this _____ day of _____, 20

By: _____

WITNESS OR ATTEST:

Prime Contractor:

_____

Prime Contractor's SBE/DVOB Liaison Officer

Telephone Number/Email_____