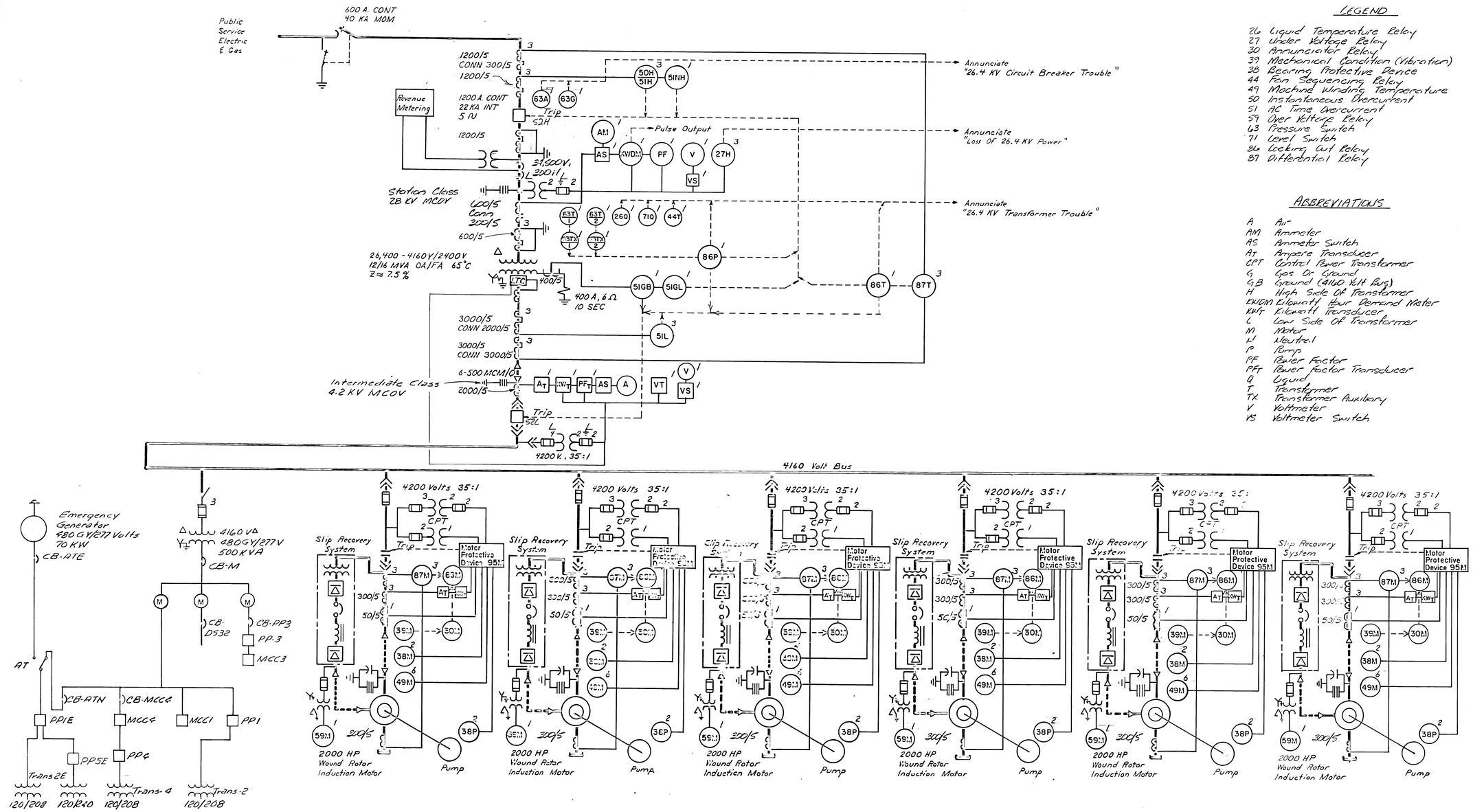

LEGEND

26 Liquid Temperature Relay
27 Under Voltage Relay
30 Annunciator Relay
39 Mechanical Condition (Vibration)
38 Bearing Protective Device
44 Fan Sequencing Relay
49 Machine Winding Temperature
50 Instantaneous Overcurrent
51 AC Time Overcurrent
59 Over Voltage Relay
63 Pressure Switch
71 Level Switch
86 Locking Out Relay
87 Differential Relay

ABBREVIATIONS

A Air
AM Ammeter
AS Ammeter Switch
AT Ampere Transducer
CPT Control Power Transformer
G Gas Or Ground
GB Ground (4160 Volt Bus)
H High Side Of Transformer
KWDM Kilowatt Hour Demand Meter
KWT Kilowatt Transducer
L Low Side Of Transformer
M Motor
N Neutral
P Pump
PF Power Factor
PFT Power Factor Transducer
Q Liquid
T Transformer
TX Transformer Auxiliary
V Voltmeter
VS Voltmeter Switch

Drawn By: SDM
Checked By: RAC
Examined By: RAC
Approved By: RAS

No.	DATE	DESCRIPTION	CKD.	APP'D.
1	12-86	AS BUILT		

REVISIONS

KUPPER ASSOCIATES
HARRY S. ALLEN N.J.P.E. 13623 — 7/24/84 DATE

O'BRIEN & GERE ENGINEERS, INC.
RUSSELL L. SUTPHIN N.J.P.E. 20051 — 7/24/84 DATE

WANAQUE SOUTH PROJECT
A JOINT VENTURE

NORTH JERSEY DISTRICT WATER SUPPLY COMMISSION
WANAQUE, NEW JERSEY

HACKENSACK WATER COMPANY
HARRINGTON PARK, NEW JERSEY

WANAQUE SOUTH PUMPING STATION

ELECTRICAL

ONE LINE DIAGRAM
4160V & 480V SYSTEMS

CONTRACT No. W-1
SHEET No. E-2
84 OF 120
SCALE: NONE
DATE: JULY, 1984